Smoke ventilation & Daily ventilation

NEW DIMENSIONS AVAILABLE 24V OR 48V

THERM

Electric - Covering upstand Thermal improvement

BLUECOIF THERM DV ELEC

NATURAL LIGHTING

SMOKE VENTILATIONA

DAILY VENTILATION

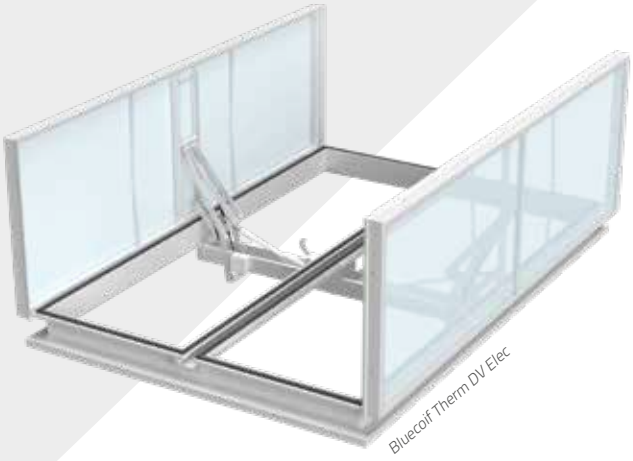

BLUETEK

- Up to 5.18 m² of smoke ventilation area
- Four air flow finishes available: S, M, L and XL
- XL model wind-breakers invisible when the device is closed

ELECTRIC CONTROL

Hyperion 24V

Coffret 48V

Standards and requirements

EN 1873
EN 12101-2

Low temperature
T (-15°)

Cycles
Re 1000 (fire)
Re 10,000 (ventilation)

Snow load
SL250/SL550

Operation
Type B
Opening + Closing

Static wind resistance
WL 1500
WL 3000 if l ≤ 160 cm
and L ≤ 250 cm

Temperature
elevation
B 300

Characteristics

Urc: 2,1 W/m².K (200/300, oblique, 300 mm high, BSL)

- **Arc = 9.7 m²**
- **AP = 0.9 m³/h/m**
- **I4 = 0.11 m³/h/m**
- 16 mm opal cellular PC (PCA) infill
- Oblique covering upstand, 150 m, insulated, 30 mm *(Version S)*
- Oblique covering upstand, 300 mm, insulated, 30 mm *(Versions M, L and XL)*
- Seal on the perimeter of the upstand
- Electrical thermofuse gauged at 100°C

Smoke ventilation | Electric - Covering upstand Thermal improvement

BLUECOIF THERM DV ELEC

Technical characteristics

	Dimensions		Performances					Characteristics															
								24 V								48 V							
								Cellular PC (PCA) 16/20				Cellular PC (PCA) 32. PI (16)(20). BSL. CAIS [1]				Cellular PC (PCA) 16/20				Cellular PC (PCA) 32. PI (16)(20). BSL. CAIS [1]			
	Commercial dimensions (Roof opening) W/L in cm	Light dimensions (high opening) W x L in cm	Av (GA) in m²	Aa (Useful area) in m²				SL 250 [2] I (A)	SL 550 [2] I (A)	SL 750 [2] I (A)	SL 1000 [2] I (A)	SL 250 [2] I (A)	SL 550 [2] I (A)	SL 750 [2] I (A)	SL 1000 [2] I (A)	SL 250 [2] I (A)	SL 550 [2] I (A)	SL 750 [2] I (A)	SL 1000 [2] I (A)	SL 250 [2] I (A)	SL 550 [2] I (A)	SL 750 [2] I (A)	SL 1000 [2] I (A)
				S	M	L	XL	Intensity per device(A)															
WL 3000	160/160	160 x 160	2,56	1,36	—	—	—	5	5	5	6	5	5	5	6	3	3	3	3	3	3	3	3
	170/170	170 x 170	2,89	1,50	—	—	—	5	5	5	8	5	5	6	8	3	3	3	4	3	3	3	4
		160 x 160		—	1,91	1,97	2,08	5	5	5	6	5	5	5	6	3	3	3	3	3	3	3	3
	180/180	180 x 180	3,24	1,62	—	—	—	5	5	5	5	5	5	5	5	3	3	3	3	3	3	3	3
		170 x 170		—	2,14	2,20	2,37	5	5	5	8	5	5	6	8	3	3	3	4	3	3	3	4
	190/190	190 x 190	3,61	1,84	—	—	—	5	5	5	6	5	5	5	6	3	3	3	3	3	3	3	3
		180 x 180		—	2,38	2,49	2,67	5	5	5	5	5	5	5	5	3	3	3	3	3	3	3	3
	200/200	200 x 200	4,00	2,04	—	—	—	5	5	5	6	5	5	5	6	3	3	3	3	3	3	3	3
		190 x 190		—	2,68	2,76	3,00	5	5	5	6	5	5	5	6	3	3	3	3	3	3	3	3
	210/210	210 x 210	4,41	2,25	—	—	—	5	5	6	8	5	5	6	8	3	3	3	4	3	3	3	4
		200 x 200		—	2,95	3,04	3,26	5	5	5	6	5	5	5	6	3	3	3	3	3	3	3	3
	220/220	220 x 220	4,84	2,47	—	—	—	5	5	6	8	5	5	6	8	3	3	3	4	3	3	3	4
		210 x 210		—	3,19	3,34	3,53	5	5	6	8	5	5	6	8	3	3	3	4	3	3	3	4
WL 3000	120/200	120 x 200	2,40	1,37	—	—	—	4	4	4	4	4	4	4	4	3	3	3	3	3	3	3	3
WL 3000	120/240	120 x 240	2,88	1,64	—	—	—	4	4	4	4	4	4	4	5	3	3	3	3	3	3	3	3
WL 3000	120/250	120 x 250	3,00	1,71	—	—	—	4	4	4	5	4	4	4	5	3	3	3	3	3	3	3	3
	120/300	120 x 300	3,60	2,05	—	—	—	4	4	4	6	4	4	5	6	3	3	3	3	3	3	3	3
WL 3000	140/200	140 x 200	2,80	1,54	—	—	—	4	4	4	5	4	4	4	5	3	3	3	3	3	3	3	3
WL 3000	140/250	140 x 250	3,50	1,93	—	—	—	4	4	5	6	4	4	5	6	3	3	3	3	3	3	3	3
		130 x 240		—	2,35	2,45	2,49	4	4	4	5	4	4	4	6	3	3	3	3	3	3	3	3
	140/300	140 x 300	4,20	2,31	—	—	—	4	4	6	-	4	5	6	-	3	3	3	-	3	3	3	-
		130 x 290		—	2,81	2,98	3,02	4	4	5	6	4	4	5	6	3	3	3	3	3	3	3	3
WL 3000	150/200	150 x 200	3,00	1,62	—	—	—	4	4	5	6	4	4	5	6	3	3	3	3	3	3	3	3
WL 3000	150/240	150 x 240	3,6	1,94	—	—	—	4	4	5	6	4	4	5	6	3	3	3	3	3	3	3	3
WL 3000	150/250	150 x 250	3,75	2,03	—	—	—	4	5	5	6	4	5	6	-	3	3	3	3	3	3	3	-
		140 x 240		—	2,51	2,63	2,70	4	4	5	6	4	4	5	6	3	3	3	3	3	3	3	3
	150/300	150 x 300	4,50	2,43	—	—	—	4	5	6	-	4	5	6	-	3	3	3	-	3	3	3	-
		140 x 290		—	3,02	3,20	3,29	4	4	5	6	4	4	6	-	3	3	3	3	3	3	3	-
WL 3000	160/200	160 x 200	3,20	1,70	—	—	—	5	5	6	8	5	5	6	8	3	3	3	4	3	3	3	4
WL 3000	160/250	160 x 250	4,00	2,12	—	—	—	5	6	8	-	5	6	-	-	3	3	4	-	3	3	4	-
		150 x 240		—	2,68	2,80	2,92	4	4	5	6	4	5	5	6	3	3	3	3	3	3	3	3
	160/300	160 x 300	4,80	2,54	—	—	—	5	6	-	-	5	6	-	-	3	3	-	-	3	3		-
		150 x 290		—	3,22	3,41	3,55	4	5	6	-	4	6	-	-	3	3	3	-	3	3	3	-
	180/250	180 x 250	4,50	2,25	—	—	—	5	5	5	6	5	5	5	6	3	3	3	3	3	3	3	3
		170 x 240		—	2,97	3,15	3,38	5	5	8	-	5	6	8		3	3	4	-	3	3	4	-
	180/280	180 x 280	5,04	2,52	—	—	—	5	5	5	6	5	5	6	8	3	3	3	3	3	3	3	4
		170 x 270		—	3,38	3,58	3,83	5	6	-	-	5	6	-	-	3	3	-	-	3	3	-	-
	180/300	180 x 300	5,40	2,70	—	—	—	5	5	6	8	5	5	6	8	3	3	3	4	3	3	3	4
		170 x 290		—	3,62	3,83	4,10	5	6	-	-	5	8	-	-	3	3	-	-	3	4	-	-
	200/250	200 x 250	5,00	2,55	—	—	—	5	5	6	8	5	5	6	8	3	3	3	4	3	3	3	4
		190 x 240		—	3,35	3,55	3,80	5	5	6	8	5	5	6	8	3	3	3	4	3	3	3	4
	200/300	200 x 300	6,00	3,06	—	—	—	5	6	8	-	5	6	8	-	3	3	4	-	3	3	4	-
		190 x 290		—	4,08	4,32	4,62	5	5	6	8	5	6	8	8	3	3	3	4	3	3	4	4
	230/300	220 x 290	6,90	—	4,55	4,90	5,18	5	6	8	-	5	6	-	-	3	3	-	-	3	3	-	-

[1] CAIS: Standard insulated aluminium cover/PI: Pearl Inside 16 /DD: Double dome cupola/BSL: Luminous sun-shading system
[2] SL 250: 25 daN/m², SL 550: 55 daN/m², SL 750: 75 daN/m², SL 1000: 100 daN/m²
— not available
*** Performance with 150 mm high S device and 300 mm high L, M and XL device, 16 mm cellular PC (PCA)**

Smoke ventilation | Electric - Covering upstand Thermal improvement

BLUECOIF THERM DV ELEC

Sectional view

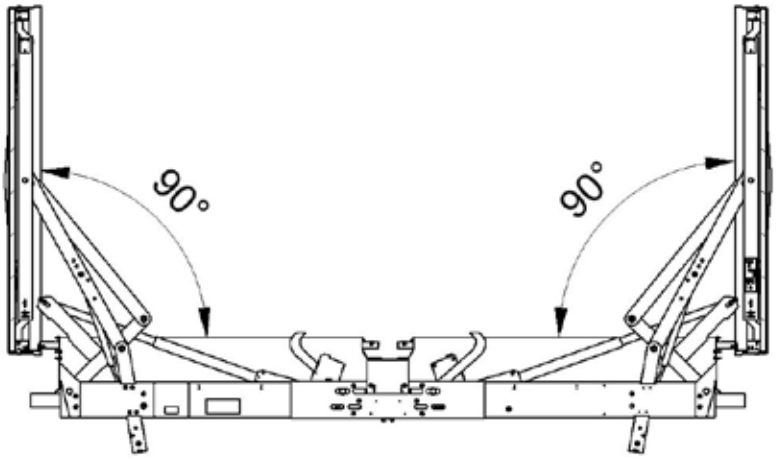

Bluecoif Therm DV Elec

Maximum overrun under upstand heel: 185 mm

EFFICIENT SOLUTIONS

Efficient solutions I 6

BSL (luminous sun-shading system)

- Reduces **sun factor by 35%***
- Improves the **thermal performance** of the skylight
- Cuts glare and light marks on the floor
- Available in clear and opal

Pearl Inside

- Improves acoustic **performance Lia: 65 dB, Rw: 28 dB (0,-2)**
- New cellular PC (PCA) concept with incorporated glass microbeads
- Crystalline effect for **an incomparable** aesthetic

Dome screen

- Aesthetic **fixed shading**
- Eliminates the greenhouse effect with protection separated from the glazing
- Protects from sunlight in the summer and lets in warmth in the winter with an optimised orientation system

** compared to 16 mm opal cellular PC (PCA)*

Smoke ventilation | Electric - Covering upstand Thermal improvement

BLUECOIF THERM DV ELEC

Infills

Accessories & options I 7
p 1 to 4

16 mm cellular PC (PCA)

16 mm cellular polycarbonate
Available in clear, opal (standard), Calor Control, opaque

20 mm cellular PC (PCA)

20 mm cellular polycarbonate
Available in opal, clear, Calor Control

32 mm cellular PC (PCA)

32 mm cellular polycarbonate
Available in opal, clear, Calor Control

INSULATED ALUMINIUM COVER

Standard

Accessories and Options

Accessories & options I 7
p 5 to 18

GRIDDLE

Fixed 15x15 mm, 1200-joule steel

GRILLE

Round fixed in 1200-joule steel

POSITION SWITCHES

Show the standby or safety position of an NSHEV.
Factory mounted

ELECTRIC RELEASE

Automatically opens the vent if the temperature near the roof rises
Available in 140°C

VENTILATION

Partial or total, with the electrical smoke ventilation motor

230 V POWER SUPPLY

Converts the 230V supply to 24V to power the opening system.

PAINTING

The upstand, grille, griddle or underside of the aluminium cover can be painted in standard RAL shades

RAL 9010 RAL 9005

Air flow finishing

- **S:** Straight upstand
- **M:** Oblique upstand + wind-breakers
- **L:** Oblique upstand + wind-breakers + shealth
- **XL:** Oblique upstand + foldaway windshields + shealth

© 2022/ Bluetek se reserva el derecho a modificar sin previo aviso la composición y las condiciones de uso de sus materiales según los conocimientos y las técnicas.
Los textos, fotografías e ilustraciones no son contractuales.

Smoke ventilation

Pneumatic - Covering upstand Thermal improvement

THERM

BLUECOIF THERM DV PNEU

NATURAL LIGHTING

SMOKE VENTILATION

Bluecoif Therm DV Pneu version S

BLUETEK

- Up to 5.18 m² of smoke control area
- Four air flow finishes available: S, M, L and XL
- XL model wind-breakers invisible when the device is closed

CONTROL

pneumatic, CLIP type

Standards and requirements

EN 1873
EN 12101-2

Low temperature
T (0°) + T(-15°)

Cycles
Re 1000 (fire)
Re 10,000 (ventilation)

Snow load
SL250/SL500/750

Operation
Type B
Opening + Closing

Static wind resistance
WL 1500

Temperature
elevation
B 300

Characteristics

Urc: 2.1 W/m².K (230/300, oblique, 300 mm high, BSL)

- **Arc = 10.8 m²**
- **AP = 0.9 m³/h/m**
- **I4 = 0.11 m³/h/m**
- 16 mm opal cellular PC (PCA)infill
- Straight covering upstand, 150 m, insulated, 30 mm *(Version S)*
- Oblique covering upstand, 300 mm, insulated, 30 mm *(Versions M, L and XL)*
- Seal on the perimeter of the upstand
- Pneumatic thermofuse gauged at 93 °C

Smoke ventilation | Pneumatic - Covering upstand Thermal improvement

BLUECOIF THERM DV PNEU

Technical characteristics

Dimensions		Performance						Characteristics							
Commercial dimensions (Roof opening) W/L in cm	**Light dimensions** (high opening) W x L in cm	**Av** (GA) in m²	**Aa** (Useful area) in m²				**Urc** (W/m²K) *	**Operating pressure** (bar)				**Total volume of cylinders in litres** (L)			
								Cellular PC (PCA) 16.20		**Cellular PC (PCA) 32. CAIS. PI(16/20). BSL** [1]		**Cellular PC 16. 20**		**Cellular PC (PCA) 32. CAIS. PI(16/20). BSL** [1]	
			S	M	L	XL		**SL 250** [2]	**SL 500** [2]	**SL 250** [2]	**SL 500** [2]	**SL 250** [2]	**SL 500** [2]	**SL 250** [2]	**SL 500** [2]
160/160	160 x 160	**2.56**	**1.36**	—	—	—	2.7 to 3.5	10	15	10	15	0.92	0.92	0.92	0.92
170/170	170 x 170	**2.89**	**1.50**	—	—	—		10	15	15	20	0.92	0.92	0.92	0.92
	160 x 160		—	**1.91**	**1.97**	**2.08**		10	15	10	15	0.92	0.92	0.92	0.92
180/180	180 x 180	**3.24**	**1.62**	—	—	—		10	20	15	20	0.92	0.92	0.92	0.92
	170 x 170		—	**2.14**	**2.20**	**2.37**		10	15	15	20	0.92	0.92	0.92	0.92
190/190	190 x 190	**3.61**	**1.84**	—	—	—		15	20	15	24	0.90	0.90	0.90	0.90
	180 x 180		—	**2.38**	**2.49**	**2.67**		10	20	15	20	0.92	0.92	0.92	0.92
200/200	200 x 200	**4.00**	**2.04**	—	—	—		15	24	20	26	0.90	0.90	0.90	0.90
	190 x 190		—	**2.68**	**2.76**	**3.00**		15	20	15	24	0.90	0.90	0.90	0.90
210/210	210 x 210	**4.41**	**2.25**	—	—	—		20	20	22	22	0.90	1.40	0.90	1.40
	200 x 200		—	**2.95**	**3.04**	**3.26**		15	24	20	26	0.90	0.90	0.90	0.90
220/220	220 x 220	**4.84**	**2.47**	—	—	—		20	22	24	26	0.90	1.40	0.90	1.40
	210 x 210		—	**3.19**	**3.34**	**3.53**		20	20	22	22	0.90	1.40	0.90	1.40
120/200	120 x 200	**2.40**	**1.37**	—	—	—		10	15	10	20	0.68	0.68	0.68	0.68
120/220	120 x 220	**2.64**	**1.50**	—	—	—		10	20	15	20	0.68	0.68	0.68	0.68
120/240	120 x 240	**2.88**	**1.64**	—	—	—		10	20	15	20	0.68	0.68	0.68	0.68
120/250	120 x 250	**3.00**	**1.71**	—	—	—		10	20	15	20	0.68	0.68	0.68	0.68
120/300	120 x 300	**3.60**	**2.05**	—	—	—		15	20	15	24	0.68	0.68	0.68	0.68
140/200	140 x 200	**2.80**	**1.54**	—	—	—		15	20	15	22	0.84	0.84	0.84	0.84
140/250	140 x 250	**3.50**	**1.93**	—	—	—		15	22	15	24	0.84	0.84	0.84	0.84
	130 x 240		—	**2.35**	**2.45**	**2.49**		15	20	15	22	0.68	0.68	0.68	0.68
140/300	140 x 300	**4.20**	**2.31**	—	—	—		15	26	20	20	0.84	0.84	0.84	1.30
	130 x 290		—	**2.81**	**2.98**	**3.02**		15	24	20	20	0.68	0.68	0.68	1.04
150/200	150 x 200	**3.00**	**1.62**	—	—	—		15	22	15	24	0.84	0.84	0.84	0.84
150/250	150 x 250	**3.75**	**2.03**	—	—	—		15	26	20	20	0.84	0.84	0.84	1.30
	140 x 240		—	**2.51**	**2.63**	**2.70**		15	22	15	24	0.84	0.84	0.84	0.84
150/300	150 x 300	**4.50**	**2.43**	—	—	—		20	20	22	22	0.84	1.30	0.84	1.30
	140 x 290		—	**3.02**	**3.20**	**3.29**		15	26	20	20	0.84	0.84	0.84	1.30
160/200	160 x 200	**3.20**	**1.70**	—	—	—		10	20	15	20	0.92	0.92	0.92	0.92
160/250	160 x 250	**4.00**	**2.12**	—	—	—		15	20	15	22	0.92	0.92	0.92	0.92
	150 x 240		—	**2.68**	**2.80**	**2.92**		15	26	20	20	0.84	0.84	0.84	1.30
160/300	160 x 300	**4.80**	**2.54**	—	—	—		15	24	20	26	0.92	0.92	0.92	0.92
	150 x 290		—	**3.22**	**3.41**	**3.55**		20	20	22	22	0.84	1.30	0.84	1.30
180/250	180 x 250	**4.50**	**2.25**	—	—	—		15	24	20	26	0.92	0.92	0.92	0.92
	170 x 240		—	**2.97**	**3.15**	**3.38**		15	22	15	24	0.92	0.92	0.92	0.92
180/280	180 x 280	**5.04**	**2.52**	—	—	—		20	20	20	20	0.92	1.44	0.92	1.44
	170 x 270		—	**3.38**	**3.58**	**3.83**		15	26	20	20	0.92	0.92	0.92	1.44
180/300	180 x 300	**5.40**	**2.70**	—	—	—		20	20	20	20	0.92	1.44	0.92	1.44
	170 x 290		—	**3.62**	**3.83**	**4.10**		15	26	20	20	0.92	0.92	0.92	1.44
200/250	200 x 250	**5.00**	**2.55**	—	—	—		20	20	20	22	0.90	1.40	0.90	1.40
	190 x 240		—	**3.35**	**3.55**	**3.80**		15	26	20	20	090	090	090	1.40
200/300	200 x 300	**6.00**	**3.06**	—	—	—		20	22	24	26	0.90	1.40	0.90	1.40
	190 x 290		—	**4.08**	**4.32**	**4.62**		20	20	20	22	0.90	1.40	0.90	1.40
230/300	220 x 290	**6.90**	—	**4.55**	**4.90**	**5.18**		24	26	20	20	0.90	1.40	1.44	2.22

[1] CAIS: Standard insulated aluminium cover/PI: Pearl Inside 16 or 20 mm/BSL: Luminous sun-shading system
[2] SL 250: 0-400 m altitude/SL 500: 400-800 m altitude
— not available
*** Performance with 150 mm high S device and 300 mm high L, M and XL device, 16 mm cellular PC (PCA)**

Smoke ventilation | Pneumatic - Covering upstand Thermal improvement

BLUECOIF THERM DV PNEU

Sectional view

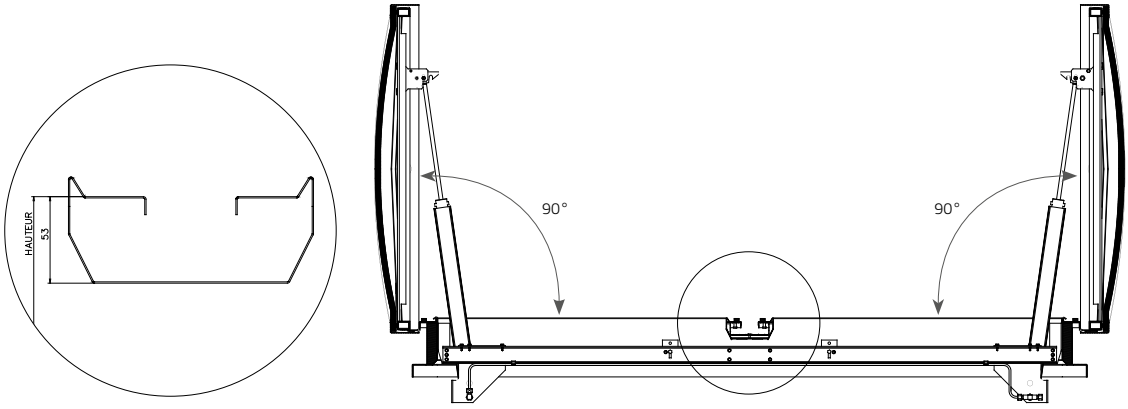

Bluecoif Therm DV Pneu (version S)

Maximum overrun under upstand heel: 120 mm

EFFICIENT SOLUTIONS

Efficient solutions | 6

BSL (luminous sun-shading system)

- Reduces **sun factor by 35%***
- Improves the **thermal performance** of the skylight
- Cuts glare and light marks on the floor
- Available in clear and opal

Pearl Inside

- Improves acoustic **performance Lia: 65 dB, Rw: 28 dB (0,-2)**
- New cellular PC (PCA) concept with incorporated glass microbeads
- Crystalline effect for **an incomparable** aesthetic

Dome screen

- Aesthetic **fixed shading**
- Eliminates the greenhouse effect with protection separated from the glazing
- Protects from sunlight in the summer and lets in warmth in the winter with an optimised orientation system

** compared to 16 mm opal cellular PC (PCA)*

Smoke ventilation | Pneumatic - Covering upstand Thermal improvement

BLUECOIF THERM DV PNEU

Infills

Accessories & options I 7
p 1 to 4

16 mm cellular PC (PCA)

16 mm cellular polycarbonate
Available in clear, opal (standard), Calor Control, opaque

20 mm cellular PC (PCA)

20 mm cellular polycarbonate
Available in opal, clear, Calor Control

32 mm cellular PC (PCA)

32 mm cellular polycarbonate
Available in opal, clear, Calor Control

INSULATED ALUMINIUM COVER

Standard

Accessories and Options

Accessories & options I 7
p 5 to 18

GRIDDLE

Fixed 15x15 mm, 1200-joule steel

GRILLE

Round fixed in 1200-joule steel

POSITION SWITCHES

Show the standby or safety position of an NSHEV.
Factory mounted

THERMAL RELEASE MECHANISM

Automatically opens the vent if the temperature near the roof rises
Available in 140°C and 180°C.

VENTILATION

Pneumatic: full opening with the smoke ventilation pneumatic cylinder (ventilation 6 bar) (depending on air flow performance)

Electric: 230 V electrical motor for partial opening, 300 mm or 500 mm (to be fitted on site)

PAINTING

The upstand, grille, griddle or underside of the aluminium cover can be painted in standard RAL shades

RAL 9010 RAL 9005

Air flow finishing

- **S:** Straight upstand
- **M:** Oblique upstand + wind-breakers
- **L:** Oblique upstand + wind-breakers + shealth
- **XL:** Oblique upstand + foldaway windshields + shealth

© 2022/ Bluetek se reserva el derecho a modificar sin previo aviso la composición y las condiciones de uso de sus materiales según los conocimientos y las técnicas.
Los textos, fotografías e ilustraciones no son contractuales.

Smoke ventilation & Daily ventilation

Electric - Covering upstand Thermal improvement

AVAILABLE 24V OR 48V

THERM

BLUECOIF THERM ELEC

NATURAL LIGHTING

SMOKE VENTILATION

DAILY VENTILATION

Bluecoif Therm Elec

BLUETEK

- Reduces heat loss thanks to improved upstand insulation
- Optimised air flow performance with the oblique upstand
- No mechanism overrun under the upstand while opening
- Device pre-mounted in the factory, ready for the wiring

ELECTRIC CONTROL

Hyperion 24V

Coffret 48V

Standards and requirements

EN 1873
EN 12101-2

Low temperature
T (-15°)

Cycles
Re 1000 (fire)
Re 10,000 (partial ventilation)

Snow load
SL250/SL550

Operation
Type B
Opening + Closing

Static wind resistance
WL 1500 Pa

Temperature elevation
B 300

Characteristics

Urc: 1.9 W/m².K (150/200, oblique, 300 mm high, BSL)

- **Arc = 5.5 m²**
- **AP = 0.5 m³/h/m**
- **I4 = 0.06 m³/h/m**

- 16 mm opal cellular PC (PCA) infill
- Straight covering upstand, 150 mm, insulated, 30 mm *(standard version)*
- Oblique covering upstand, 300 mm, insulated, 30 mm *(Max version)*
- Seal on the perimeter of the upstand
- Electric thermofuse gauged at 100 °C

Smoke ventilation | Electric - Covering upstand Thermal improvement

BLUECOIF THERM ELEC

Technical characteristics

Dimensions			Performance				Characteristics						
Commercial dimensions (roof opening) W/L in cm	Light dimensions (high opening) W x L in cm	Dimensions in cm C/D (see sectional view)	Av (GA) in m²	Useful area (Aa) in m²		Urc (W/m²K)*	Voltage U (V)	Cellular PC (PCA) 16		Cellular PC (PCA) 20.32, BSL, PI (16), CAIS [1]		PI (20), DD [1]	
				Std	Max			SL 250 [2] I (A)	SL 550 [2] I (A)	SL 250 [2] I (A)	SL 550 [2] I (A)	SL 250 [2] I (A)	SL 550 [2] I (A)
100/100	100 x 100	327/1117	**1.00**	**0.55**	—	**2.4 to 3**	24	4.5	4.5	4.5	4.5	4.5	4.5
110/110	100 x 100	490/1115	**1.21**	—	**0.90**			4.5	4.5	4.5	4.5	4.5	4.5
110/110	110 x 110	353/1213	**1.21**	**0.67**	—			4.5	4.5	4.5	4.5	4.5	4.5
120/120	110 x 110	516/1212	**1.44**	—	**1.07**			4.5	4.5	4.5	4.5	4.5	4.5
120/120	120 x 120	379/1310	**1.44**	**0.79**	—			4.5	4.5	4.5	4.5	4.5	4.5
130/130	120 x 120	542/1308	**1.69**	—	**1.27**			4.5	4.5	4.5	4.5	4.5	4.5
130/130	130 x 130	405/1406	**1.69**	**0.93**	—			4.5	4.5	4.5	4.5	4.5	4.5
140/140	130 x 130	567/1405	**1.96**	—	**1.47**			4.5	4.5	4.5	4.5	4.5	4.5
140/140	140 x 140	431/1503	**1.96**	**1.08**	—			4.5	4.5	4.5	4.5	4.5	4.5
150/150	140 x 140	593/1501	**2.25**	—	**1.29**			4.5	4.5	4.5	4.5	4.5	4.5
100/140	100 x 140	327/1117	**1.40**	**0.73**	—			4.5	4.5	4.5	4.5	—	—
100/150	100 x 150	327/1117	**1.50**	**0.78**	—			4.5	4.5	4.5	4.5	—	—
100/200	100 x 200	327/1117	**2.00**	**1.00**	—			4.5	4.5	4.5	4.5	—	—
120/140	110 x 130	516/1212	**1.68**	—	**1.26**			4.5	4.5	4.5	4.5	—	—
120/140	120 x 140	379/1310	**1.68**	**0.92**	—			4.5	4.5	4.5	4.5	—	—
120/160	110 x 150	516/1212	**1.92**	—	**1.44**			4.5	4.5	4.5	4.5	—	—
120/160	120 x 160	379/1310	**1.92**	**1.06**	—			4.5	4.5	4.5	4.5	—	—
120/170	110 x 160	516/1212	**2.04**	—	**1.53**			4.5	4.5	4.5	4.5	—	—
120/170	120 x 170	379/1310	**2.04**	**1.12**	—			4.5	4.5	4.5	4.5	—	—
120/180	110 x 170	516/1212	**2.16**	—	**1.62**			4.5	4.5	4.5	4.5	—	—
120/180	120 x 180	379/1310	**2.16**	**1.10**	—			4.5	4.5	4.5	4.5	—	—
120/200	110 x 190	516/1212	**2.40**	—	**1.80**			4.5	4.5	4.5	4.5	—	—
120/200	120 x 200	379/1310	**2.40**	**1.22**	—			4.5	4.5	4.5	4.5	—	—
120/220	120 x 220	385/1308	**2.64**	**1.35**	—			4.5	4.5	4.5	4.5	—	—
120/240	110 x 230	516/1212	**2.88**	—	**2.16**			4.5	4.5	4.5	4.5	—	—
120/240	120 x 240	379/1310	**2.88**	**1.47**	—			4.5	4.5	4.5	4.5	—	—
120/250	120 x 250	379/1310	**3.00**	**1.53**	—			4.5	4.5	4.5	4.5	—	—
140/160	130 x 150	567/1405	**2.24**	—	**1.68**			4.5	4.5	4.5	4.5	—	—
140/160	140 x 160	431/1503	**2.24**	**1.23**	—			4.5	4.5	4.5	4.5	—	—
140/200	130 x 190	567/1405	**2.80**	—	**2.10**			4.5	4.5	4.5	4.5	—	—
140/200	140 x 200	431/1503	**2.80**	**1.46**	—			4.5	4.5	4.5	4.5	—	—
150/200	140 x 190	593/1501	**3.00**	—	**2.25**			4.5	4.5	4.5	4.5	—	—

[1] CAIS: Standard insulated aluminium cover/PI: Pearl Inside 16 or 20 mm/DD: Double dome cupola/BSL: Luminous sun-shading system
[2] SL 250: 0-400 m altitude/SL 500: 400-800 m altitude
— not available
*** Performance with 16 mm cellular PC (PCA) (150 mm or 300 mm high)**

Smoke ventilation | Electric - Covering upstand Thermal improvement

BLUECOIF THERM ELEC

Sectional view

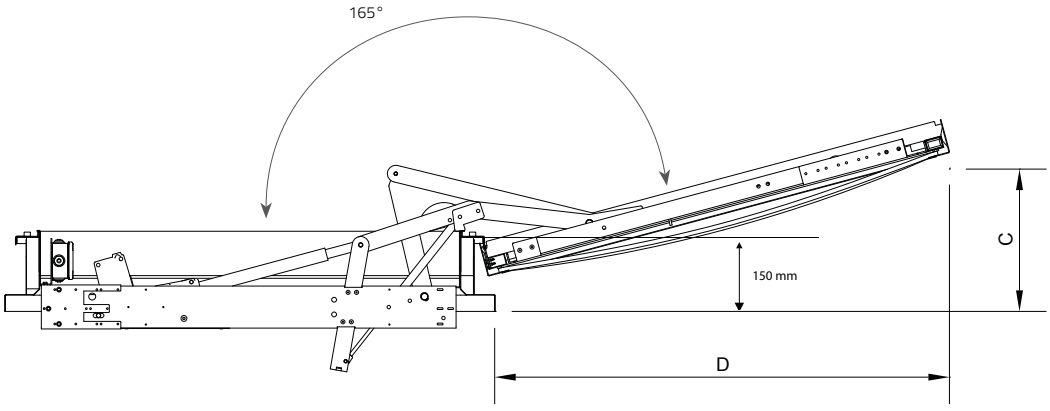

Bluecoif Therm Elec (standard version)

Maximum overrun under upstand heel: 135 mm

EFFICIENT SOLUTIONS

Efficient solutions | 6

BSL (luminous sun-shading system)

- Reduces **sun factor by 35%***
- Improves the **thermal performance** of the skylight
- Cuts glare and light marks on the floor
- Available in clear and opal

Pearl Inside

- Improves acoustic **performance Lia: 65 dB, Rw: 28 dB (0,-2)**
- New cellular PC (PCA) concept with incorporated glass microbeads
- Crystalline effect for **an incomparable** aesthetic

Dome screen

- Aesthetic **fixed shading**
- Eliminates the greenhouse effect with protection separated from the glazing
- Protects from sunlight in the summer and lets in warmth in the winter with an optimised orientation system

** compared to 16 mm opal cellular PC (PCA)*

Smoke ventilation | Electric - Covering upstand Thermal improvement

BLUECOIF THERM ELEC

Infills

Accessories & options I 7
p 1 to 4

16 mm cellular PC (PCA)

16 mm cellular polycarbonate
Available in clear, Calor Control, opaque

20 mm cellular PC (PCA)

20 mm cellular polycarbonate
Available in opal, clear, Calor Control, opaque

32 mm cellular PC (PCA)

32 mm cellular polycarbonate
Available in opal, clear, Calor Control

CUPOLA

Double wall, opal or clear in solid polycarbonate or polymethyl methacrylate

INSULATED ALUMINIUM COVER

Standard

Accessories and Options

Accessories & options I 7
p 5 to 18

GRIDDLE

Fixed 15x15 mm, 1200-joule steel

GRILLE

Round fixed in 1200-joule steel

POSITION SWITCH

Shows the standby or safety position of an NSHEV. Factory mounted

ELECTRIC RELEASE

Automatically opens the vent if the temperature near the roof rises
Available in 140°C

VENTILATION

Partial or total, with the smoke ventilation electrical motor

PAINTING

The upstand, grille, griddle or underside of the aluminium cover can be painted in standard RAL shades

RAL 9010 RAL 9005

Air flow finishing

WITHOUT SPOILERS (STANDARD VERSION)

SPOILERS (MAX. VERSION)

Galvanised steel elements that improve air flow performance

© 2022/ Bluetek se reserva el derecho a modificar sin previo aviso la composición y las condiciones de uso de sus materiales según los conocimientos y las técnicas.
Los textos, fotografías e ilustraciones no son contractuales.

Smoke ventilation

Pneumatic - Covering upstand Thermal improvement

THERM

BLUECOIF THERM PNEU

NATURAL LIGHTING

SMOKE VENTILATION

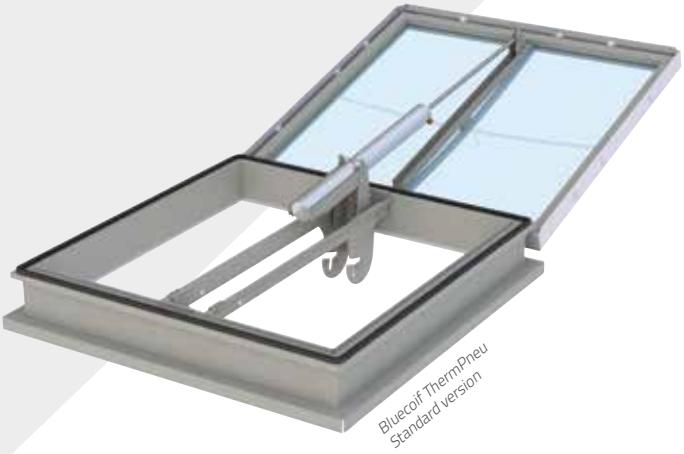

Bluecoif ThermPneu
Standard version

BLUETEK

- Reduces heat loss thanks to improved upstand insulation
- Optimised air flow performance with the oblique upstand
- No mechanism overrun under the upstand while opening
- Device pre-mounted in the factory, ready for the copper tube

CONTROL

pneumatic, CLIP type

Standards and requirements

EN 1873
EN 12101-2

Low temperature
T (-15°)

Cycles
Re 300 (fire)
Re 1000 (fire depending on infill and dim.)
Re 10,000 (partial or total ventilation depending on infill and dim)

Snow load
SL250/SL500

Operation
Type B
Opening + Closing

Static wind resistance
WL 1500 or
WL 3000 (≤ 2.53 m² and width ≤ 1.4m)

Temperature elevation
B 300

Characteristics

Urc: 1.8 W/m².K (200/200, oblique 300 mm high, BSL)

- **Arc = 6.9 m²**
- **AP = 0.5 m³/h/m**
- **I4 = 0.06 m³/h/m**

- 16 mm opal cellular PC (PCA) infill
- Straight covering upstand, 150 mm, insulated, 30 mm *(standard version)*
- Oblique covering upstand, 300 mm, insulated, 30 mm *(Max version)*
- Seal on the perimeter of the upstand
- Pneumatic thermofuse gauged at 93 °C

Smoke ventilation | Pneumatic - Covering upstand Thermal improvement

BLUECOIF THERM PNEU

Technical characteristics

Dimensions			Performance				Characteristics											
							Operating pressure (bar)						Total volume of cylinders in litres (L)					
							Cellular PC (PCA) 16. 20		Cellular PC (PCA) 32. CAIS [1]		16/20 cellular PC (PCA). BSL [1]		Cellular PC (PCA) 16. 20		Cellular PC (PCA) 32. CAIS [1]		PI (16/20). DD. BSL [1]	
Commercial dimensions (roof opening) W/L in cm	**Light dimensions** (high opening) W x L in cm	**Dimensions** in cm C/D (see sectional view)	**Av** (GA) in m²	**Aa** (Useful area) in m² Std	Aa Max	**Urc** (W/m²K)*	SL 250 [2]	SL 500 [2]	SL 250 [2]	SL 500 [2]	SL 250 [2]	SL 500 [2]	SL 250 [2]	SL 500 [2]	SL 250 [2]	SL 500 [2]	SL 250 [2]	SL 500 [2]
80 /80	80 x 80	275 / 923	**0.64**	**0.35**	—	2.4 to 3.1	15	20	15	25	15	25	0.73	0.73	0.73	0.73	0.73	0.73
90/90	80 x 80	438 / 922	**0.81**	—	**0.60**		15	20	15	25	15	25	0.73	0.73	0.73	0.73	0.73	0.73
	90 x 90	301 / 1020		**0.45**	—		15	25	20	15	20	15	0.73	0.73	0.73	1.43	0.73	1.43
100/100	90 x 90	464 / 1018	**1.00**	—	**0.74**		15	25	20	15	20	15	0.73	0.73	0.73	1.43	0.73	1.43
	100 x 100	327 / 1117		**0.55**	—		15	25	20	15	20	15	0.83	0.83	0.83	1.63	0.83	1.63
110/110	100 x 100	490 / 1115	**1.21**	—	**0.90**		15	25	20	15	20	15	0.83	0.83	0.83	1.63	0.83	1.63
	110 x 110	353 / 1213		**0.67**	—		20	20	25	20	25	20	0.83	1.63	0.83	1.63	0.83	1.63
120/120	110 x 110	516 / 1212	**1.44**	—	**1.07**		20	20	25	20	25	20	0.83	1.63	0.83	1.63	0.83	1.63
	120 x 120	379 / 1310		**0.79**	—		25	20	15	25	15	25	0.83	1.63	1.63	1.63	1.63	1.63
130/130	120 x 120	542 / 1308	**1.69**	—	**1.27**		25	20	15	25	15	25	0.83	1.63	1.63	1.63	1.63	1.63
	130 x 130	405 / 1406		**0.93**	—		15	25	20	25	20	25	1.63	1.63	1.63	2.10	1.63	2.10
140/140	130 x 130	567 / 1405	**1.96**	—	**1.47**		15	25	20	25	20	25	1.63	1.63	1.63	2.10	1.63	2.10
	140 x 140	431 / 1503		**1.08**	—		15	25	15	25	15	25	2.32	2.32	2.32	2.32	2.32	2.32
150/150	140 x 140	593 / 1501	**2.25**	—	**1.69**		15	25	15	25	15	25	2.32	2.32	2.32	2.32	2.32	2.32
	150 x 150	456 / 1599		**1.24**	—		15	25	20	25	20	25	2.32	2.32	2.32	2.93	2.32	2.93
160/160	150 x 150	619 / 1598	**2.56**	—	**1.95**		15	25	20	25	20	25	2.32	2.32	2.32	2.93	2.32	2.93
	160 x 160	482 / 1696		**1.38**	—		20	25	20	—	20	—	2.32	2.93	2.32	—	2.32	—
170/170	160 x 160	645 / 1695	**2.89**	—	**2.20**		20	25	20	—	20	—	2.32	2.93	2.32	—	2.32	—
	170 x 170	508 / 1793		**1.56**	—		20	—	25	—	25	—	2.32	—	2.32	—	2.32	—
180/180	170 x 170	671 / 1791	**3.24**	—	**2.46**		20	—	25	—	25	—	2.32	—	2.32	—	2.32	—
	180 x 180	534 / 1889		**1.72**	—		15	—	20	—	20	—	3.60	—	3.60	—	3.60	—
190/190	180 x 180	697 / 1888	**3.61**	—	**2.45**		15	—	20	—	20	—	3.60	—	3.60	—	3.60	—
200/200	190 x 190	723 / 1984	**4.00**	—	**2.72**		20	—	20	—	20	—	3.60	—	3.60	—	3.60	—
80 /130	80 x 130	275 / 923	**1.04**	**0.54**	—		20	15	20	15	20	15	0.73	1.43	0.73	1.43	0.73	1.43
100/140	90 x 130	464 / 1018	**1.40**	—	**1.05**		20	20	25	20	25	20	0.73	1.43	0.73	1.43	0.73	1.43
	100 x 140	327 / 1117		**0.73**	—		20	20	25	20	25	20	0.83	1.63	0.83	1.63	0.83	1.63
100/150	90 x 140	464 / 1018	**1.50**	—	**1.13**		20	20	25	20	25	20	0.73	1.43	0.73	1.43	0.73	1.43
	100 x 150	327 / 1117		**0.78**	—		20	20	25	20	25	20	0.83	1.63	0.83	1.63	0.83	1.63
100/200	90 x 190	464 / 1018	**2.00**	—	**1.50**		15	25	20	25	20	25	1.43	1.43	1.43	1.43	1.43	1.43
	100 x 200	327 / 1117		**1.00**	—		25	25	20	25	20	25	0.83	1.63	1.63	1.63	1.63	1.63
120/140	110 x 130	516 / 1212	**1.68**	—	**1.26**		25	20	25	20	25	20	0.83	1.63	0.83	1.63	0.83	1.63
	120 x 140	379 / 1310		**0.92**	—		15	25	20	25	20	25	1.63	1.63	1.63	1.63	1.63	1.63
120/160	110 x 150	516 / 1212	**1.92**	—	**1.44**		25	25	15	25	15	25	0.83	1.63	1.63	2.10	1.63	2.10
	120 x 160	379 / 1310		**1.06**	—		15	25	20	25	20	25	1.63	1.63	1.63	2.10	1.63	2.10
120/170	110 x 160	516 / 1212	**2.04**	—	**1.53**		25	25	15	25	15	25	0.83	1.63	1.63	2.10	1.63	2.10
	120 x 170	379 / 1310		**1.12**	—		20	25	20	25	20	25	1.63	2.10	1.63	2.10	1.63	2.10
120/180	110 x 170	516 / 1212	**2.16**	—	**1.62**		15	25	20	25	20	25	1.63	1.63	1.63	2.10	1.63	2.10
	120 x 180	379 / 1310		**1.10**	—		20	25	20	25	20	25	1.63	2.10	1.63	2.10	1.63	2.10
120/200	110 x 190	516 / 1212	**2.40**	—	**1.80**		15	25	20	25	20	25	1.63	1.63	1.63	2.10	1.63	2.10
	120 x 200	379 / 1310		**1.22**	—		20	25	25	—	25	—	1.63	2.10	1.63	—	1.63	—
120/220	110 x 200	516 / 1212	**2.64**	—	**1.98**		20	25	20	25	20	25	1.63	2.10	1.63	2.10	1.63	2.10
	120 x 220	379 / 1310		**1.35**	—		20	25	25	—	25	—	1.63	2.10	1.63	—	1.63	—
120/240	110 x 230	516 / 1212	**2.88**	—	**2.16**		20	25	25	25	25	25	1.63	2.10	1.63	2.10	1.63	2.10
	120 x 240	379 / 1310		**1.47**	—		25	—	25	—	25	—	1.63	—	1.63	—	1.63	—
120/250	110 x 240	516 / 1212	**3.00**	—	**2.13**		20	25	25	—	25	—	1.63	2.10	1.63	—	1.63	—
	120 x 250	379 / 1310		**1.53**	—		25	—	25	—	25	—	1.63	—	1.63	—	1.63	—
140/160	130 x 150	567 / 1405	**2.24**	—	**1.68**		20	25	20	25	20	25	1.63	2.10	1.63	2.10	1.63	2.10
	140 x 160	431 / 1503		**1.23**	—		15	25	20	25	20	25	2.32	2.32	2.32	2.93	2.32	2.93
140/200	130 x 190	567 / 1405	**2.80**	—	**2.10**		20	25	25	—	25	—	1.63	2.10	1.63	—	1.63	—
	140 x 200	431 / 1503		**1.46**	—		20	25	20	25	20	25	2.32	2.93	2.32	2.93	2.32	2.93
150/200	140 x 190	593 / 1501	**3.00**	—	**2.25**		20	25	20	25	20	25	2.32	2.93	2.32	2.93	2.32	2.93
	150 x 200	456 / 1599		**1.56**	—		20	25	25	—	25	—	2.32	2.93	2.32	—	2.32	—
160/200	150 x 190	619 / 1598	**3.20**	—	**2.43**		20	25	25	—	25	—	2.32	2.93	2.32	—	2.32	—
	160 x 200	482 / 1696		**1.70**	—		25	—	25	—	25	—	2.32	—	2.32	—	2.32	—

[1] CAIS: Standard insulated aluminium cover/PI (16/20): Pearl Inside 16 or 20 mm/DD: Double dome cupola/BSL: Luminous sun-shading system
[2] SL 250: 0-400 m altitude/SL 500: 400-800 m altitude
— not available
*** Performance with 16 mm cellular PC (PCA) (150 mm or 300 mm high)**

Smoke ventilation | Pneumatic - Covering upstand Thermal improvement

BLUECOIF THERM PNEU

Sectional view

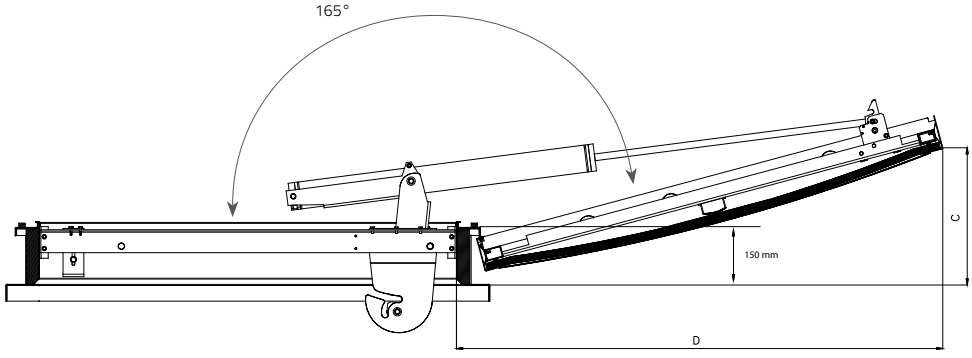

Bluecoif Therm Pneu (standard version)

Maximum overrun under upstand heel: 250 mm

EFFICIENT SOLUTIONS

Efficient solutions | 6

BSL (luminous sun-shading system)

- Reduces **sun factor by 35%***
- Improves the **thermal performance** of the skylight
- Cuts glare and light marks on the floor
- Available in clear and opal

Pearl Inside

- Improves acoustic **performance** **Lia: 65 dB, Rw: 28 dB (0,-2)**
- New cellular PC (PCA) concept with incorporated glass microbeads
- Crystalline effect for **an incomparable** aesthetic

Dome screen

- Aesthetic **fixed shading**
- Eliminates the greenhouse effect with protection separated from the glazing
- Protects from sunlight in the summer and lets in warmth in the winter with an optimised orientation system

** compared to 16 mm opal cellular PC (PCA)*

Smoke ventilation | Pneumatic - Covering upstand Thermal improvement

BLUECOIF THERM PNEU

Infills

Accessories & options I 7
p 1 to 4

16 mm cellular PC (PCA)

16 mm cellular polycarbonate
Available in clear, opal (standard), Calor Control, opaque

20 mm cellular PC (PCA)

20 mm cellular polycarbonate
Available in opal, clear, Calor Control

32 mm cellular PC (PCA)

32 mm cellular polycarbonate
Available in opal, clear, Calor Control

CUPOLA

Double wall, opal or clear in solid polycarbonate or polymethyl methacrylate

INSULATED ALUMINIUM COVER

Standard

Accessories and Options

Accessories & options I 7
p 5 to 18

GRIDDLE

Fixed 15x15 mm, 1200-joule steel

GRILLE

Round fixed in 1200-joule steel

POSITION SWITCH

Shows the standby or safety position of an NSHEV. Factory mounted

THERMAL RELEASE MECHANISM

Automatically opens the vent if the temperature near the roof rises
Available in 140°C and 180°C.

VENTILATION

Pneumatic: full opening with the smoke ventilation pneumatic cylinder (ventilation 6 bar) (depending on dimensions and infill)

Electric: 230 V electrical motor for partial opening, 300 mm or 500 mm (to be fitted on site)

PAINTING

The upstand, grille, griddle or underside of the aluminium cover can be painted in standard RAL shades

RAL 9010 RAL 9005

Air flow finishing

WITHOUT SPOILERS (STANDARD VERSION)

SPOILERS (MAX. VERSION)

Galvanised steel elements that improve air flow performance

© 2022/ Bluetek se reserva el derecho a modificar sin previo aviso la composición y las condiciones de uso de sus materiales según los conocimientos y las técnicas.
Los textos, fotografías e ilustraciones no son contractuales.

Smoke ventilation

Winch - Covering upstand Thermal improvement

THERM

BLUECOIF THERM WINCH

NATURAL LIGHTING

SMOKE VENTILATION

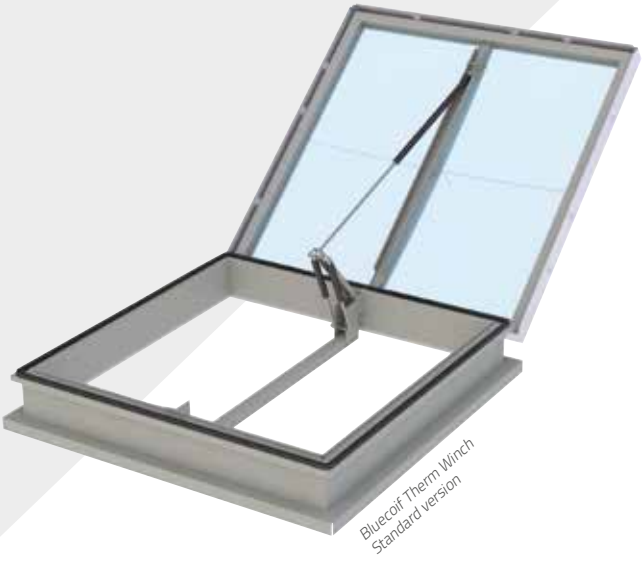

BLUETEK

- Reduces heat loss thanks to improved upstand insulation
- Optimised air flow performance with the oblique upstand
- No mechanism overrun under the upstand while opening
- Device pre-mounted in the factory, ready for the winch cable

CONTROL

mechanical, WINCH SI type

Standards and requirements

EN 1873
EN 12101-2

Low temperature
T (0°)

Cycles
Re 300 (fire)
Re 10,000 (ventilation)

Snow load
SL250/SL500

Operation
Type B
Opening + Closing

Static wind resistance
WL 1500
WL 3000 (≤ 2 m²)

Temperature elevation
B 300

Characteristics

Urc: 2W/m².K (140/140, oblique, 300 mm high, BSL)

- **Arc = 4 m²**
- **AP = 0.4 m³/h/m**
- **I4 = 0.05 m³/h/m**

- 16 mm opal cellular PC (PCA) infill
- Straight covering upstand, 150 mm, insulated, 30 mm *(standard version)*
- Oblique covering upstand, 300 mm, insulated, 30 mm *(Max version)*
- Seal on the perimeter of the upstand
- Mechanical thermofuse gauged at 100°C

Smoke ventilation | Winch - Covering upstand Thermal improvement

BLUECOIF THERM WINCH

Technical characteristics

Dimensions			Performances				Characteristics						
							Snow load						
							PCA 16. 20		PCA 32. CAIS [1]		PI. BSL [1]		TD
Commercial dimensions (roof opening) W/L in cm	**Light dimensions** (high opening) W x L in cm	**Dimensions** in cm C/D (see sectional view)	**Av** (GA) in m²	**Aa** (useful area) in m² Std	Max	**Urc** (W/m²K)*	SL250 [2]	SL500 [2]	SL250 [2]	SL500 [2]	SL250 [2]	SL500 [2]	SL250 [2]
90/90	90 x 90	711 / 845	**0.81**	**0.41**	—	de 2.4 à 3.3	•	•	•	•	•	•	•
100/100	90 x 90	923 / 845	**1.00**	—	**0.74**		•	•	•	•	•	•	•
100/100	100 x 100	775 / 922	**1.00**	**0.50**	—		•	•	•	•	•	•	•
110/110	100 x 100	987 / 922	**1.21**	—	**0.90**		•	•	•	•	•	•	•
110/110	110 x 110	839 / 998	**1.21**	**0.61**	—		•	•	•	•	•	•	•
120/120	110 x 110	1051 / 998	**1.44**	—	**1.07**		•	•	•	•	•	•	•
120/120	120 x 120	904 / 1075	**1.44**	**0.72**	—		•	—	•	—	•	—	•
130/130	120 x 120	1116 / 1075	**1.69**	—	**1.27**		•	—	•	—	•	—	•
130/130	130 x 130	968 / 1152	**1.69**	**0.85**	—		•	—	•	—	•	—	•
140/140	130 x 130	1180 / 1152	**1.96**	—	**1.47**		•	—	•	—	•	—	•
140/140	140 x 140	1032 / 1228	**1.96**	**0.98**	—		•	—	—	—	—	—	—
150/150	140 x 140	1244 / 1228	**2.25**	—	**1.69**		•	—	—	—	—	—	—
100/140	100 x 140	775 / 922	**1.40**	**0.70**	—		•	—	•	—	•	—	•
100/140	90 x 130	923 / 845	**1.40**	—	**1.05**		•	•	•	•	•	•	•
100/150	100 x 150	775 / 922	**1.50**	**0.75**	—		•	—	•	—	•	—	•
100/150	90 x 140	923 / 845	**1.50**	—	**1.13**		•	•	•	•	•	•	•
100/200	100 x 200	775 / 922	**2.00**	**0.76**	—		•	—	•	—	•	—	•
100/200	90 x 190	923 / 845	**2.00**	—	**1.50**		•	—	•	—	•	—	•
120/140	120 x 140	904 / 1075	**1.68**	**0.84**	—		•	—	•	—	•	—	•
120/140	110 x 130	1051 / 998	**1.68**	—	**1.26**		•	—	•	—	•	—	•
120/160	120 x 160	904 / 1075	**1.92**	**0.75**	—		•	—	•	—	—	—	—
120/160	110 x 150	1051 / 998	**1.92**	—	**1.44**		•	—	•	—	•	—	•
120/170	120 x 170	904 / 1075	**2.04**	**0.80**	—		•	—	•	—	—	—	—
120/170	110 x 160	1051 / 998	**2.04**	—	**1.53**		•	—	•	—	•	—	•
120/180	120 x 180	904 / 1075	**2.16**	**0.82**	—		•	—	•	—	—	—	—
120/180	110 x 170	1051 / 998	**2.16**	—	**1.62**		•	—	•	—	•	—	•
120/200	110 x 190	1051 / 998	**2.40**	—	**1.80**		•	—	•	—	—	—	—
120/220	110 x 210	1051 / 998	**2.64**	—	**1.98**		•	—	•	—	—	—	—
120/240	110 x 230	1051 / 998	**2.88**	—	**2.16**		•	—	—	—	—	—	—
140/160	130 x 150	1180 / 1152	**2.24**	—	**1.68**		•	—	•	—	—	—	—

[1] CAIS: Standard insulated aluminium cover/PI (16/20): Pearl Inside 16 or 20 mm/TD: Triple dome cupola/BSL: Luminous sun-shading system
[2] SL 250: 0-400 m altitude/SL 500: 400-800 m altitude
● *available,* — *not available*
*** Performance with 16 mm cellular PC (PCA) (150 mm or 300 mm high)**

Smoke ventilation | Winch - Covering upstand Thermal improvement

BLUECOIF THERM WINCH

Sectional view

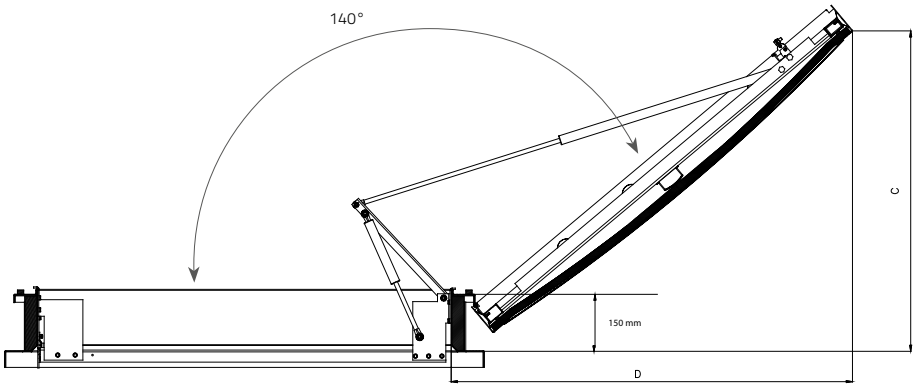

Bluecoif Therm Winch (standard version)

Maximum overrun under upstand heel: 40 mm

EFFICIENT SOLUTIONS

Efficient solutions | 6

BSL (luminous sun-shading system)

- Reduces **sun factor by 35%***
- Improves the **thermal performance** of the skylight
- Cuts glare and light marks on the floor
- Available in clear and opal

Pearl Inside

- Improves acoustic **performance Lia: 65 dB, Rw: 28 dB (0,-2)**
- New cellular PC (PCA) concept with incorporated glass microbeads
- Crystalline effect for **an incomparable** aesthetic

Dome screen

- Aesthetic **fixed shading**
- Eliminates the greenhouse effect with protection separated from the glazing
- Protects from sunlight in the summer and lets in warmth in the winter with an optimised orientation system

** compared to 16 mm opal cellular PC (PCA)*

Smoke ventilation | Winch - Covering upstand Thermal improvement

BLUECOIF THERM WINCH

Infills

Accessories & options I 7
p 1 to 4

16 mm cellular PC (PCA)

16 mm cellular polycarbonate
Available in clear, opal (standard), Calor Control, opaque

20 mm cellular PC (PCA)

20 mm cellular polycarbonate
Available in opal, clear, Calor Control

32 mm cellular PC (PCA)

32 mm cellular polycarbonate
Available in opal, clear, Calor Control

CUPOLA

Double wall, opal or clear in solid polycarbonate or polymethyl methacrylate

INSULATED ALUMINIUM COVER

Standard

Accessories and Options

Accessories & options I 7
p 5 to 18

GRIDDLE

Fixed 15x15 mm, 1200-joule steel

GRILLE

Round fixed in 1200-joule steel

POSITION SWITCH

Shows the standby or safety position of an NSHEV. Factory mounted

THERMAL RELEASE MECHANISM

Automatically opens the vent if the temperature near the roof rises.
Possible with 140°C

VENTILATION

Partial 300 mm

PAINTING

The upstand, grille, griddle or underside of the aluminium cover can be painted in standard RAL shades, please enquire

RAL 9010 RAL 9005

Air flow finishing

WITHOUT SPOILERS (STANDARD VERSION)

SPOILERS (MAX. VERSION)

Galvanised steel elements that improve air flow performance

© 2022/ Bluetek se reserva el derecho a modificar sin previo aviso la composición y las condiciones de uso de sus materiales según los conocimientos y las técnicas.
Los textos, fotografías e ilustraciones no son contractuales.

Smoke ventilation, Roof access & Daily ventilation

THERM

Electric - Covering upstand Thermal improvement

BLUECOIF THERM ELEC + ACCESS

NATURAL LIGHTING | SMOKE VENTILATION | ROOF ACCESS | DAILY VENTILATION

Bluecoif Therm Elec + Access

BLUETEK

- Easy roof access with remote roof access mechanism
- No actuator overrun under the upstand while opening
- Device pre-mounted in the factory, ready for the wiring

CONTROL

electric, HYPERION type

Standards and requirements

EN 1873
EN 12101-2

Low temperature T (0°)

Cycles Re 1000 (fire) Re 10,000 (partial ventilation)

Snow load SL250/SL500

Operation Type B Opening + Closing

Static wind resistance WL 1500

Temperature elevation B 300

Characteristics

Urc: 2.4 W/m².K (120/120, straight, 110 mm high, BSL)

- **Arc = 2.5 m²**
- **AP = 0.4 m³/h/m**
- **I4 = 0.05 m³/h/m**

- 16 mm opal cellular PC (PCA) infill
- Straight covering upstand, 110 mm, insulated, 30 mm
- Seal on the perimeter of the upstand
- Electric thermofuse gauged at 100 °C

Smoke ventilation, Roof access & Daily ventilation | Electric - Covering upstand Thermal improvement

BLUECOIF THERM ELEC + ACCESS

Technical characteristics

Dimensions			Performance			Characteristics				
Commercial dimensions (roof opening) W/L in cm	**Light dimensions** (high opening) W x L in cm	**Dimensions** in cm C/D (see sectional view)	**Av** (GA) in m²	**Aa** (useful area) in m²	**Urc** (W/m²K)*	**Voltage U (V)**	**Cellular PC (PCA) 16, 20**		**Cellular PC (PCA) 32, BSL, PI (16), CAIS** [1]	
				Std			**SL 250** [2] **I (A)**	**SL 500** [2] **I (A)**	**SL 250** [2] **I (A)**	**SL 500** [2] **I (A)**
100/100	100 x 100	1259/640	**1.00**	**0.21**	**3.1 to 3.2**	24	2.5	4	4	4
120/120	120 x 120	1433/740	**1.44**	**0.30**		24	2.5	—	4	—

[1] CAIS: Standard insulated aluminium cover/DD: Double dome cupola/BSL: Luminous sun-shading system/PI 16): Pearl Inside 16 mm
[2] SL 250: 0-400 m altitude/SL 500: 400-800 m altitude
— not available
*** Performance with 110 mm high device, 16 mm cellular PC (PCA)**

Smoke ventilation, Roof access & Daily ventilation | Electric - Covering upstand Thermal improvement

BLUECOIF THERM ELEC + ACCESS

Sectional view

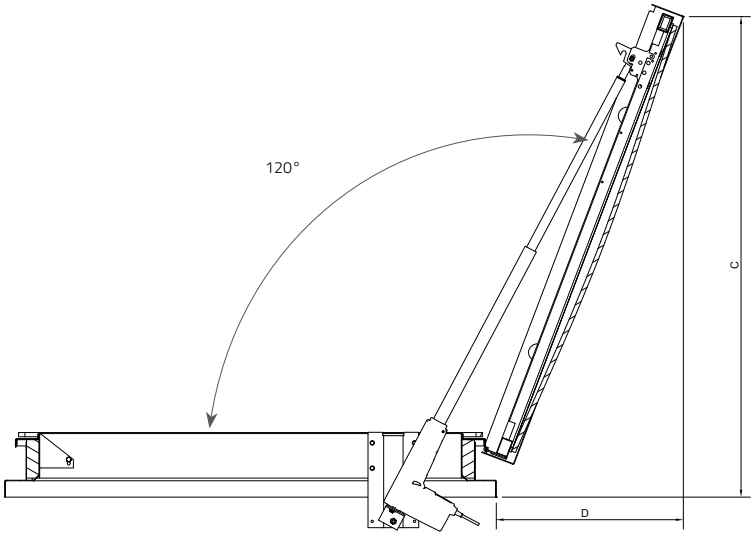

Bluecoif Therm Elec + Access

Maximum overrun under upstand heel: 85 mm

EFFICIENT SOLUTIONS

Efficient solutions I 6

BSL (luminous sun-shading system)

- Reduces **sun factor by 35%***
- Improves the **thermal performance** of the skylight
- Cuts glare and light marks on the floor
- Available in clear and opal

Pearl Inside

- Improves acoustic **performance Lia: 65 dB, Rw: 28 dB (0,-2)**
- New cellular PC (PCA) concept with incorporated glass microbeads
- Crystalline effect for **an incomparable** aesthetic

** compared to 16 mm opal cellular PC (PCA)*

Smoke ventilation, Roof access & Daily ventilation | Electric - Covering upstand Thermal improvement

BLUECOIF THERM ELEC + ACCESS

Infills

Accessories & options I 7
p 1 to 4

16 mm cellular PC (PCA)

16 mm cellular polycarbonate
Available in clear, opal(standard), Calor Control, opaque

20 mm cellular PC (PCA)

20 mm cellular polycarbonate
Available in opal, clear, Calor Control

32 mm cellular PC (PCA)

32 mm cellular polycarbonate
Available in opal, clear, Calor Control

INSULATED ALUMINIUM COVER

Standard

Accessories and Options

Accessories & options I 7
p 5 to 18

GRIDDLE

15x15 mm opening frame in 1200-joule steel

GRILLE

Round opening in 1200-joule steel

ROOF ACCESS BAR

Galvanised steel bar that makes access to the roof easier and safer

LADDER SUSPENSION BAR

Galvanised steel tube that may be used to support any type of ladder for access to the roof

Ladder available in our Control binder

POSITION SWITCH

Shows the standby or safety position of an NSHEV. Factory mounted

ELECTRIC RELEASE

Automatically opens the vent if the temperature near the roof rises
Available in 140°C.

PAINTING

The upstand, grille, griddle or underside of the aluminium cover can be painted in standard RAL shades

RAL 9010 RAL 9005

Air flow finishing

WITHOUT SPOILERS (STANDARD VERSION)

© 2022/ Bluetek se reserva el derecho a modificar sin previo aviso la composición y las condiciones de uso de sus materiales según los conocimientos y las técnicas.
Los textos, fotografías e ilustraciones no son contractuales.

Smoke ventilation & Roof access

Pneumatic - Covering upstand Thermal improvement

THERM

BLUECOIF THERM PNEU + ACCESS

NATURAL LIGHTING

SMOKE VENTILATION

ROOF ACCESS

Bluecoif Therm Pneu + Access

BLUETEK

- Easy roof access with remote roof access mechanism
- No actuator overrun under the upstand while opening
- Device pre-mounted in the factory, ready for the copper tube

CONTROL

pneumatic, CLIP type

Standards and requirements

EN 1873
EN 12101-2

Low temperature
T (-15°)

Cycles
Re 300 (fire)

Snow load
SL250/SL550

Operation
Type B
Opening + Closing

Static wind resistance
WL 1500

Temperature
elevation
B 300

Characteristics

Urc: 2.4 W/m².K (120/120, straight, 110 mm high, BSL)

- **Arc = 2.5 m²**
- **AP = 0.4 m³/h/m**
- **I4 = 0.05 m³/h/m**

- 16 mm opal cellular PC (PCA) infill
- Straight covering upstand, 110 mm, insulated, 30 mm
- Seal on the perimeter of the upstand
- Pneumatic thermofuse gauged at 93 °C

Smoke ventilation & Roof access | Pneumatic - Covering upstand Thermal improvement

BLUECOIF THERM PNEU + ACCESS

Technical characteristics

Dimensions			Performance			Characteristics							
Commercial dimensions (roof opening) W/L in cm	**Light dimensions** (high opening) W x L in cm	**Dimensions** in cm C/D (see sectional view)	**Av** (GA) in m²	**Aa** (useful area) in m²	**Urc** (W/m²K)*	**Operating pressure** (bar)				**Total volume of cylinders in litres** (L)			
						Cellular PC (PCA) 16. 20		**Cellular PC (PCA) 32. BSL. CAIS** [1]		**Cellular PC (PCA) 16. 20**		**Cellular PC (PCA) 32. BSL. CAIS. PI (16)** [1]	
				Std		**SL 250** [2]	**SL 550** [2]	**SL 250** [2]	**SL 550** [2]	**SL 250** [2]	**SL 550** [2]	**SL 250** [2]	**SL 550** [2]
100/100	100 x 100	987 / 922	**1.00**	**0.50**	**de 3.1 à 3.2**	12	22	13	23	1.67	1.67	1.67	1.67
110/110	110 x 110	1051 / 998	**1.21**	**0.61**		16	—	18	—	1.67	—	1.67	—
120/120	120 x 120	1116 / 1075	**1.44**	**0.72**		11	19	12	—	2.07	2.07	2.07	—

[1] CAIS: Standard insulated aluminium cover/DD: Double dome cupola/BSL: Luminous sun-shading system/PI: Pearl Inside 16 mm
[2] SL 250: 0-400 m altitude/SL 500: 400-800 m altitude
— not available
*** Performance with 110 mm high device, 16 mm cellular PC (PCA)**

Smoke ventilation & Roof access | Pneumatic - Covering upstand Thermal improvement

BLUECOIF THERM PNEU + ACCESS

Sectional view

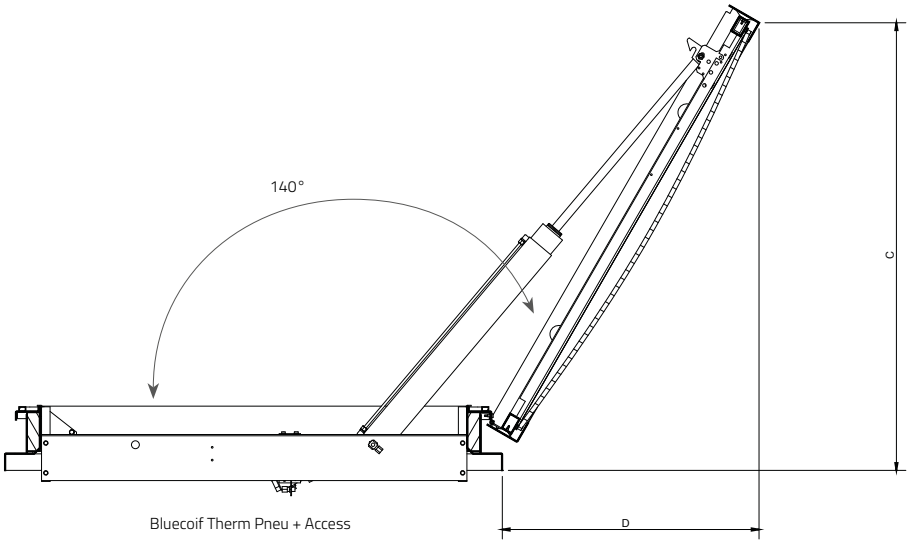

Maximum overrun under upstand heel: 45 mm

EFFICIENT SOLUTIONS

Efficient solutions I 6

BSL (luminous sun-shading system)

- Reduces **sun factor by 35%***
- Improves the **thermal performance** of the skylight
- Cuts glare and light marks on the floor
- Available in clear and opal

Pearl Inside

- Improves acoustic **performance** **Lia: 65 dB, Rw: 28 dB (0,-2)**
- New cellular PC (PCA) concept with incorporated glass microbeads
- Crystalline effect for **an incomparable** aesthetic

** compared to 16 mm opal cellular PC (PCA)*

Smoke ventilation & Roof access | Pneumatic - Covering upstand Thermal improvement

BLUECOIF THERM PNEU + ACCESS

Infills

Accessories & options I 7
p 1 to 4

16 mm cellular PC (PCA)

16 mm cellular polycarbonate
Available in clear, opal (standard), Calor Control, opaque

20 mm cellular PC (PCA)

20 mm cellular polycarbonate
Available in opal, clear, Calor Control

32 mm cellular PC (PCA)

32 mm cellular polycarbonate
Available in opal, clear, Calor Control

INSULATED ALUMINIUM COVER

Standard

Accessories and Options

Accessories & options I 7
p 5 to 18

GRIDDLE

15x15 mm opening frame in 1200-joule steel

GRILLE

Round opening in 1200-joule steel

ROOF ACCESS BAR

Galvanised steel bar that makes access to the roof easier and safer

LADDER SUSPENSION BAR

Galvanised steel tube that may be used to support any type of ladder for access to the roof

Ladder available in our Control binder

POSITION SWITCH

Shows the standby or safety position of an NSHEV. Factory mounted

THERMAL RELEASE MECHANISM

Automatically opens the vent if the temperature near the roof rises
Available in 140°C.

PAINTING

The upstand, grille, griddle or underside of the aluminium cover can be painted in standard RAL shades

RAL 9010 RAL 9005

Air flow finishing

WITHOUT SPOILERS (STANDARD VERSION)

© 2022/ Bluetek se reserva el derecho a modificar sin previo aviso la composición y las condiciones de uso de sus materiales según los conocimientos y las técnicas.
Los textos, fotografías e ilustraciones no son contractuales.

Smoke ventilation & Roof access

Winch - Covering upstand Thermal improvement

THERM

BLUECOIF THERM WINCH + ACCESS

NATURAL LIGHTING
SMOKE VENTILATION
ROOF ACCESS

BLUETEK

- Easy roof access with remote roof access mechanism
- No actuator overrun under the upstand while opening
- Device pre-mounted in the factory, ready for the winch cable

CONTROL
mechanical, WINCH SI type

Standards and requirements

EN 1873
EN 12101-2

Low temperature
T (0°)

Cycles
Re 300 (fire)
Re 10,000 (partial ventilation)

Snow load
SL250

Operation
Type B
Opening + Closing

Static wind resistance
WL 1500 or
WL 3000 (≤ 1 m²)

Temperature
elevation
B 300

Characteristics

Urc: 2.5 W/m².K (100/100, straight, 110 mm high, BSL)

- **Arc = 1.9 m²**
- **AP = 0.4 m³/h/m**
- **I4 = 0.05 m³/h/m**

- 16 mm opal cellular PC (PCA) infill
- Straight covering upstand, 110 mm, insulated, 30 mm
- Seal on the perimeter of the upstand
- Mechanical thermofuse gauged at 100°C

Smoke ventilation & Roof access | Winch - Covering upstand Thermal improvement

BLUECOIF THERM WINCH + ACCESS

Technical characteristics

Dimensions			Performance			Characteristics	
						Snow load	
Commercial dimensions (roof opening) W/L in cm	**Light dimensions** (high opening) W x L in cm	**Dimensions** in cm C/D (see sectional view	**Av** (GA) in m²	**Aa** (useful area) in m²	**Urc** (W/m²K)	**Cellular PC (PCA) 16, 20**	**Cellular PC (PCA) 32, PI, CAIS, DD, BSL** [1]
				Std		**SL 250** [2]	**SL 250** [2]
90/90	90 x 90	923/845	**0.81**	**0.41**	**3.1 to 3.3**	●	●
100/100	100 x 100	987/922	**1.00**	**0.50**		●	●
110/110	110 x 110	1051/998	**1.21**	**0.61**		●	—
120/120	120 x 120	1116/1075	**1.44**	**0.72**		●	—

[1] CAIS: Standard insulated aluminium cover/DD: Double dome cupola/BSL: Luminous sun-shading system/PI: Pearl Inside 16 and 20 mm
[2] SL 250: 0-400 m altitude/SL 500: 400-800 m altitude

● *available,* — *not available*
*** Performance with 110 mm high device, 16 mm cellular PC**

Smoke ventilation & Roof access | Winch - Covering upstand Thermal improvement

BLUECOIF THERM WINCH + ACCESS

Sectional view

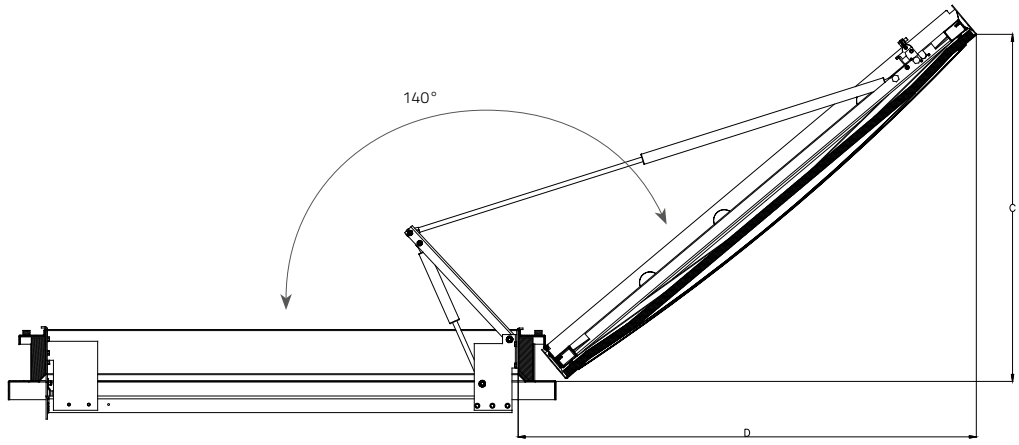

Bluecoif Therm Winch + Access

Maximum overrun under upstand heel: 80 mm

EFFICIENT SOLUTIONS

Efficient solutions I 6

BSL (luminous sun-shading system)

- Reduces **sun factor by 35%***
- Improves the **thermal performance** of the skylight
- Cuts glare and light marks on the floor
- Available in clear and opal

Pearl Inside

- Improves acoustic **performance Lia: 65 dB, Rw: 28 dB (0,-2)**
- New cellular PC (PCA) concept with incorporated glass microbeads
- Crystalline effect for **an incomparable** aesthetic

** compared to 16 mm opal cellular PC (PCA)*

Smoke ventilation & Roof access | Winch - Covering upstand Thermal improvement

BLUECOIF THERM WINCH + ACCESS

Infills

Accessories & options I 7
p 1 to 4

16 mm cellular PC (PCA)

16 mm cellular polycarbonate
Available in clear, opal (standard), Calor Control, opaque

20 mm cellular PC (PCA)

20 mm cellular polycarbonate
Available in opal, clear, Calor Control

32 mm cellular PC (PCA)

32 mm cellular polycarbonate
Available in opal, clear, Calor Control

INSULATED ALUMINIUM COVER

Standard

Accessories and Options

Accessories & options I 7
p 5 to 18

GRIDDLE

15x15 mm opening frame in 1200-joule steel

GRILLE

Round opening in 1200-joule steel

ROOF ACCESS BAR

Galvanised steel bar that makes access to the roof easier and safer

LADDER SUSPENSION BAR

Galvanised steel tube that may be used to support any type of ladder for access to the roof

Ladder available in our Control binder

POSITION SWITCH

Shows the standby or safety position of an NSHEV. Factory mounted

THERMAL RELEASE MECHANISM

Automatically opens the vent if the temperature near the roof rises
Available in 140°C.

PAINTING

The upstand, grille, griddle or underside of the aluminium cover can be painted in standard RAL shades

RAL 9010 RAL 9005

Air flow finishing

WITHOUT SPOILERS (STANDARD VERSION)

© 2022/ Bluetek se reserva el derecho a modificar sin previo aviso la composición y las condiciones de uso de sus materiales según los conocimientos y las técnicas.
Los textos, fotografías e ilustraciones no son contractuales.

Smoke control & Ventilation

Electric - Standard steel covering upstand

NEW DIMENSIONS
AVAILABLE 24V OR 48V

BLUECOIF DV ELEC

NATURAL LIGHTING

SMOKE VENTILATION

DAILY VENTILATION

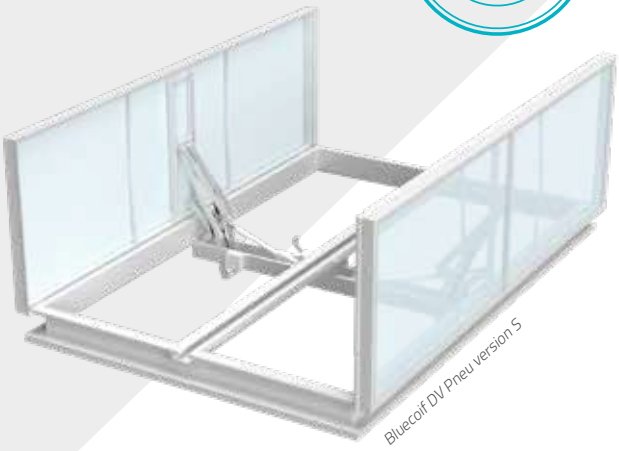

Bluecoif DV Pneu version S

BLUETEK

- Up to 5.18 m² of smoke ventilation area
- Four air flow finishes available: S, M, L and XL
- XL model wind-breakers invisible when the device is closed, factory mounted

ELECTRIC CONTROL

Hyperion 24V

Coffret 48V

Standards and requirements

EN 1873
EN 12101-2

Low temperature
T (-15°)

Cycles
Re 1000 (fire)
Re 10,000 (ventilation)

Snow load
SL250/SL550

Operation
Type B
Opening + Closing

Static wind resistance
WL 1500
WL 3000 if l ≤ 160 cm
and L ≤ 250 cm

Temperature
elevation
B 300

Characteristics

- 10 mm opal cellular PC (PCA) infill
- Straight covering upstand, 150 mm *(version S)*
- Oblique covering upstand, 300 mm *(versions M, L and XL)*
- Electric thermofuse gauged at 100 °C

Smoke ventilation & Daily ventilation | Electric - Standard steel covering upstand

BLUECOIF DV ELEC

Technical characteristics

	Dimensions		Performances					Characteristics															
								24 V								48 V							
								Cellular PC (PCA) 10/16				CAIS [1]				Cellular PC (PCA) 10/16				CAIS [1]			
	Commercial dimensions (Roof opening) W/L in cm	Light dimensions (high opening) W x L in cm	Av (GA) in m²	Aa (Useful area) in m²				SL 250 [2] I (A)	SL 550 [2] I (A)	SL 750 [2] I (A)	SL 1000 [2] I (A)	SL 250 [2] I (A)	SL 550 [2] I (A)	SL 750 [2] I (A)	SL 1000 [2] I (A)	SL 250 [2] I (A)	SL 550 [2] I (A)	SL 750 [2] I (A)	SL 1000 [2] I (A)	SL 250 [2] I (A)	SL 550 [2] I (A)	SL 750 [2] I (A)	SL 1000 [2] I (A)
				S	M	L	XL	Intensity per device(A)															
WL 3000	160/160	160 x 160	2,56	1,36	—	—	—	5	5	5	6	5	5	5	6	3	3	3	3	3	3	3	3
	170/170	170 x 170	2,89	1,50	—	—	—	5	5	5	8	5	5	6	8	3	3	3	4	3	3	3	4
		160 x 160		—	1,91	1,97	2,08	5	5	5	6	5	5	5	6	3	3	3	3	3	3	3	3
	180/180	180 x 180	3,24	1,62	—	—	—	5	5	5	5	5	5	5	5	3	3	3	3	3	3	3	3
		170 x 170		—	2,14	2,20	2,37	5	5	5	8	5	5	6	8	3	3	3	4	3	3	3	4
	190/190	190 x 190	3,61	1,84	—	—	—	5	5	5	6	5	5	5	6	3	3	3	3	3	3	3	3
		180 x 180		—	2,38	2,49	2,67	5	5	5	5	5	5	5	5	3	3	3	3	3	3	3	3
	200/200	200 x 200	4,00	2,04	—	—	—	5	5	5	6	5	5	5	6	3	3	3	3	3	3	3	3
		190 x 190		—	2,68	2,76	3,00	5	5	5	6	5	5	5	6	3	3	3	3	3	3	3	3
	210/210	210 x 210	4,41	2,25	—	—	—	5	5	6	8	5	5	6	8	3	3	3	4	3	3	3	4
		200 x 200		—	2,95	3,04	3,26	5	5	5	6	5	5	5	6	3	3	3	3	3	3	3	3
	220/220	220 x 220	4,84	2,47	—	—	—	5	5	6	8	5	5	6	8	3	3	3	4	3	3	3	4
		210 x 210		—	3,19	3,34	3,53	5	5	6	8	5	5	6	8	3	3	3	4	3	3	3	4
WL 3000	120/200	120 x 200	2,40	1,37	—	—	—	4	4	4	4	4	4	4	4	3	3	3	3	3	3	3	3
WL 3000	120/240	120 x 240	2,88	1,64	—	—	—	4	4	4	4	4	4	4	5	3	3	3	3	3	3	3	3
WL 3000	120/250	120 x 250	3,00	1,71	—	—	—	4	4	4	5	4	4	4	5	3	3	3	3	3	3	3	3
	120/300	120 x 300	3,60	2,05	—	—	—	4	4	4	6	4	4	5	6	3	3	3	3	3	3	3	3
WL 3000	140/200	140 x 200	2,80	1,54	—	—	—	4	4	4	5	4	4	4	5	3	3	3	3	3	3	3	3
WL 3000	140/250	140 x 250	3,50	1,93	—	—	—	4	4	5	6	4	4	5	6	3	3	3	3	3	3	3	3
		130 x 240		—	2,35	2,45	2,49	4	4	4	5	4	4	4	6	3	3	3	3	3	3	3	3
	140/300	140 x 300	4,20	2,31	—	—	—	4	4	6	-	4	5	6	-	3	3	3	-	3	3	3	-
		130 x 290		—	2,81	2,98	3,02	4	4	5	6	4	4	5	6	3	3	3	3	3	3	3	3
WL 3000	150/200	150 x 200	3,00	1,62	—	—	—	4	4	5	6	4	4	5	6	3	3	3	3	3	3	3	3
WL 3000	150/240	150 x 240	3,6	1,94	—	—	—	4	4	5	6	4	4	5	6	3	3	3	3	3	3	3	3
WL 3000	150/250	150 x 250	3,75	2,03	—	—	—	4	5	5	6	4	5	6	-	3	3	3	3	3	3	3	-
		140 x 240		—	2,51	2,63	2,70	4	4	5	6	4	4	5	6	3	3	3	3	3	3	3	3
	150/300	150 x 300	4,50	2,43	—	—	—	4	5	6	-	4	5	6	-	3	3	3	-	3	3	3	-
		140 x 290		—	3,02	3,20	3,29	4	4	5	6	4	4	6	-	3	3	3	3	3	3	3	-
WL 3000	160/200	160 x 200	3,20	1,70	—	—	—	5	5	6	8	5	5	6	8	3	3	3	4	3	3	3	4
WL 3000	160/250	160 x 250	4,00	2,12	—	—	—	5	6	8	-	5	6	-	-	3	3	4	-	3	3	4	-
		150 x 240		—	2,68	2,80	2,92	4	4	5	6	4	5	5	6	3	3	3	3	3	3	3	3
	160/300	160 x 300	4,80	2,54	—	—	—	5	6	-	-	5	6	-	-	3	3	-	-	3	3		-
		150 x 290		—	3,22	3,41	3,55	4	5	6	-	4	6	-	-	3	3	3	-	3	3	3	-
	180/250	180 x 250	4,50	2,25	—	—	—	5	5	5	6	5	5	5	6	3	3	3	3	3	3	3	3
		170 x 240		—	2,97	3,15	3,38	5	5	8	-	5	6	8		3	3	4	-	3	3	4	-
	180/280	180 x 280	5,04	2,52	—	—	—	5	5	5	6	5	5	6	8	3	3	3	3	3	3	3	4
		170 x 270		—	3,38	3,58	3,83	5	6	-	-	5	6	-	-	3	3	-	-	3	3	-	-
	180/300	180 x 300	5,40	2,70	—	—	—	5	5	6	8	5	5	6	8	3	3	3	4	3	3	3	4
		170 x 290		—	3,62	3,83	4,10	5	6	-	-	5	8	-	-	3	3	-	-	3	4	-	-
	200/250	200 x 250	5,00	2,55	—	—	—	5	5	6	8	5	5	6	8	3	3	3	4	3	3	3	4
		190 x 240		—	3,35	3,55	3,80	5	5	6	8	5	5	6	8	3	3	3	4	3	3	3	4
	200/300	200 x 300	6,00	3,06	—	—	—	5	6	8	-	5	6	8	-	3	3	4	-	3	3	4	-
		190 x 290		—	4,08	4,32	4,62	5	5	6	8	5	6	8	8	3	3	3	4	3	3	4	4
	230/300	220 x 290	6,90	—	4,55	4,90	5,18	5	6	8	-	5	6	-	-	3	3	-	-	3	3	-	-

[1] CAIS: Standard insulated aluminium cover
[2] SL 250: 25 daN/m², SL 550: 55 daN/m², SL 750: 75 daN/m², SL 1000: 100 daN/m²
— not available

Smoke ventilation & Daily ventilation | Electric - Standard steel covering upstand

BLUECOIF DV ELEC

Sectional view

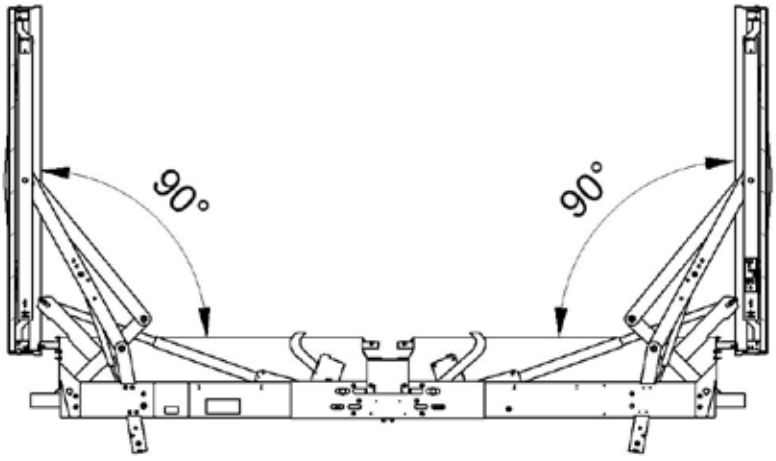

Maximum overrun under upstand heel: 185 mm

Smoke ventilation & Daily ventilation | Electric - Standard steel covering upstand

BLUECOIF DV ELEC

Infills

Accessories & options I 7
p 1 to 4

10 mm cellular PC (PCA)

10 mm cellular polycarbonate
Available in clear, opal (standard), opaque, Calor Control

16 mm cellular PC (PCA)

16 mm cellular polycarbonate
Available in opal, clear, opaque, Calor Control

INSULATED ALUMINIUM COVER

Standard

Accessories and Options

Accessories & options I 7
p 5 to 18

GRIDDLE

Fixed 15x15 mm, 1200-joule steel

GRILLE

Round fixed in 1200-joule steel

POSITION SWITCHES

Show the standby or safety position of an NSHEV.
Factory mounted

ELECTRIC RELEASE

Automatically opens the vent if the temperature near the roof rises
Available in 140°C

VENTILATION

Partial or total, with the smoke ventilation electrical motor

230 V POWER SUPPLY

Converts the 230V supply to 24V to power the opening system.

PAINTING

The upstand, grille, griddle or underside of the aluminium cover can be painted in standard RAL shades

RAL 9010 RAL 9005

Air flow finishing

S: Straight upstand

M: Oblique upstand + wind-breakers

L: Oblique upstand + wind-breakers + shealth

XL: Oblique upstand + foldaway windshields + shealth

© 2022/ Bluetek se reserva el derecho a modificar sin previo aviso la composición y las condiciones de uso de sus materiales según los conocimientos y las técnicas.
Los textos, fotografías e ilustraciones no son contractuales.

Smoke ventilation

Pneumatic - Standard steel covering upstand

BLUECOIF DV PNEU

NATURAL LIGHTING

SMOKE VENTILATION

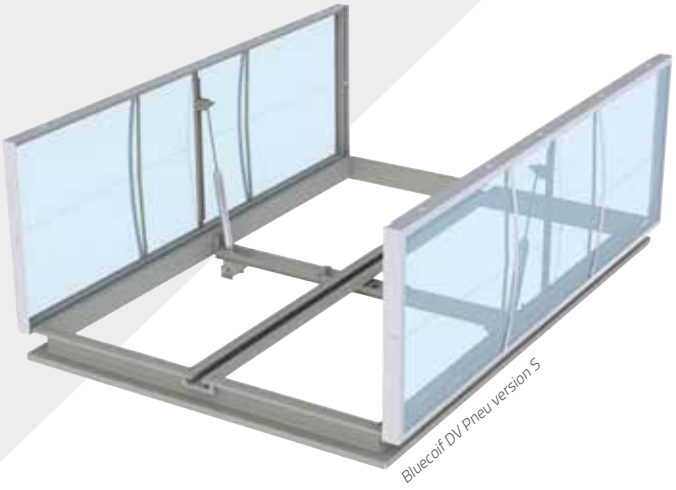

Bluecoif DV Pneu version S

BLUETEK

- Up to 5.18 m² of smoke control area
- Four air flow finishes available: S, M, L and XL
- XL model wind-breakers invisible when the device is closed, factory mounted

CONTROL

pneumatic, CLIP type

Standards and requirements

EN 1873
EN 12101-2

Low temperature
T (0°)
T (-15°)

Cycles
Re 1000 (fire)
Re 10,000 (ventilation)

Snow load
SL250/SL500

Operation
Type B
Opening + Closing

Static wind resistance
WL 1500

Temperature elevation
B 300

Characteristics

- 10 mm opal cellular PC (PCA) infill
- Straight covering upstand, 150 mm *(version S)*
- Oblique covering upstand, 300 mm *(versions M, L and XL)*
- Pneumatic thermofuse gauged at 93 °C

Smoke ventilation | Pneumatic - Standard steel covering upstand

BLUECOIF DV PNEU

Technical characteristics

Dimensions		Performance					Characteristics							
Commercial dimensions (Roof opening) W/L in cm	Light dimensions (high opening) W x L in cm	Av (GA) in m²	Aa (Useful area) in m²				Operating pressure (bar)				Total volume of cylinders in litres (L)			
							Cellular PC (PCA) 10. 16		CAIS [1]		Cellular PC (PCA) 10. 16		CAIS [1]	
			S	M	L	XL	SL 250 [2]	SL 500 [2]	SL 250 [2]	SL 500 [2]	SL 250 [2]	SL 500 [2]	SL 250 [2]	SL 500 [2]
160/160	160 x 160	**2.56**	**1.36**	—	—	—	10	15	10	15	0.92	0.92	0.92	0.92
170/170	170 x 170	**2.89**	**1.50**	—	—	—	10	15	15	20	0.92	0.92	0.92	0.92
	160 x 160		—	**1.91**	**1.97**	**2.08**	10	15	10	15	0.92	0.92	0.92	0.92
180/180	180 x 180	**3.24**	**1.62**	—	—	—	10	20	15	20	0.92	0.92	0.92	0.92
	170 x 170		—	**2.14**	**2.20**	**2.37**	10	15	15	20	0.92	0.92	0.92	0.92
190/190	190 x 190	**3.61**	**1.84**	—	—	—	15	20	15	24	0.90	0.90	0.90	0.90
	180 x 180		—	**2.38**	**2.49**	**2.67**	10	20	15	20	0.92	0.92	0.92	0.92
200/200	200 x 200	**4.00**	**2.04**	—	—	—	15	24	20	26	0.90	0.90	0.90	0.90
	190 x 190		—	**2.68**	**2.76**	**3.00**	15	20	15	24	0.90	0.90	0.90	0.90
210/210	210 x 210	**4.41**	**2.25**	—	—	—	20	20	22	22	0.90	1.40	0.90	1.40
	200 x 200		—	**2.95**	**3.04**	**3.26**	15	24	20	26	0.90	0.90	0.90	0.90
220/220	220 x 220	**4.84**	**2.47**	—	—	—	20	22	24	26	0.90	1.40	0.90	1.40
	210 x 210		—	**3.19**	**3.34**	**3.53**	20	20	22	22	0.90	1.40	0.90	1.40
120/200	120 x 200	**2.40**	**1.37**	—	—	—	10	15	10	20	0.68	0.68	0.68	0.68
120/220	120 x 220	**2.64**	**1.50**	—	—	—	10	20	15	20	0.68	0.68	0.68	0.68
120/240	120 x 240	**2.88**	**1.64**	—	—	—	10	20	15	20	0.68	0.68	0.68	0.68
120/250	120 x 250	**3.00**	**1.71**	—	—	—	10	20	15	20	0.68	0.68	0.68	0.68
120/300	120 x 300	**3.60**	**2.05**	—	—	—	15	20	15	24	0.68	0.68	0.68	0.68
140/200	140 x 200	**2.80**	**1.54**	—	—	—	15	20	15	22	0.84	0.84	0.84	0.84
140/250	140 x 250	**3.50**	**1.93**	—	—	—	15	22	15	24	0.84	0.84	0.84	0.84
	130 x 240		—	**2.35**	**2.45**	**2.49**	15	20	15	22	0.68	0.68	0.68	0.68
140/300	140 x 300	**4.20**	**2.31**	—	—	—	15	26	20	20	0.84	0.84	0.84	1.30
	130 x 290		—	**2.81**	**2.98**	**3.02**	15	24	20	20	0.68	0.68	0.68	1.04
150/200	150 x 200	**3.00**	**1.62**	—	—	—	15	22	15	24	0.84	0.84	0.84	0.84
150/250	150 x 250	**3.75**	**2.03**	—	—	—	15	26	20	20	0.84	0.84	0.84	1.30
	140 x 240		—	**2.51**	**2.63**	**2.70**	15	22	15	24	0.84	0.84	0.84	0.84
150/300	150 x 300	**4.50**	**2.43**	—	—	—	20	20	22	22	0.84	1.30	0.84	1.30
	140 x 290		—	**3.02**	**3.20**	**3.29**	15	26	20	20	0.84	0.84	0.84	1.30
160/200	160 x 200	**3.20**	**1.70**	—	—	—	10	20	15	20	0.92	0.92	0.92	0.92
160/250	160 x 250	**4.00**	**2.12**	—	—	—	15	20	15	22	0.92	0.92	0.92	0.92
	150 x 240		—	**2.68**	**2.80**	**2.92**	15	26	20	20	0.84	0.84	0.84	1.30
160/300	160 x 300	**4.80**	**2.54**	—	—	—	15	24	20	26	0.92	0.92	0.92	0.92
	150 x 290		—	**3.22**	**3.41**	**3.55**	20	20	22	22	0.84	1.30	0.84	1.30
180/250	180 x 250	**4.50**	**2.25**	—	—	—	15	24	20	26	0.92	0.92	0.92	0.92
	170 x 240		—	**2.97**	**3.15**	**3.38**	15	22	15	24	0.92	0.92	0.92	0.92
180/280	180 x 280	**5.04**	**2.52**	—	—	—	20	20	20	20	0.92	1.44	0.92	1.44
	170 x 270		—	**3.38**	**3.58**	**3.83**	15	26	20	20	0.92	0.92	0.92	1.44
180/300	180 x 300	**5.40**	**2.70**	—	—	—	20	20	20	20	0.92	1.44	0.92	1.44
	170 x 290		—	**3.62**	**3.83**	**4.10**	15	26	20	20	0.92	0.92	0.92	1.44
200/250	200 x 250	**5.00**	**2.55**	—	—	—	20	20	20	22	0.90	1.40	0.90	1.40
	190 x 240		—	**3.35**	**3.55**	**3.80**	15	26	20	20	090	090	090	1.40
200/300	200 x 300	**6.00**	**3.06**	—	—	—	20	22	24	26	0.90	1.40	0.90	1.40
	190 x 290		—	**4.08**	**4.32**	**4.62**	20	20	20	22	0.90	1.40	0.90	1.40
230/300	220 x 290	**6.90**	—	**4.55**	**4.90**	**5.18**	24	26	20	20	0.90	1.40	1.44	2.22

[1] CAIS: Standard insulated aluminium cover
[2] SL 250: 0-400 m altitude/SL 500: 400-800 m altitude
— not available

Smoke ventilation | Pneumatic - Standard steel covering upstand

BLUECOIF DV PNEU

Sectional view

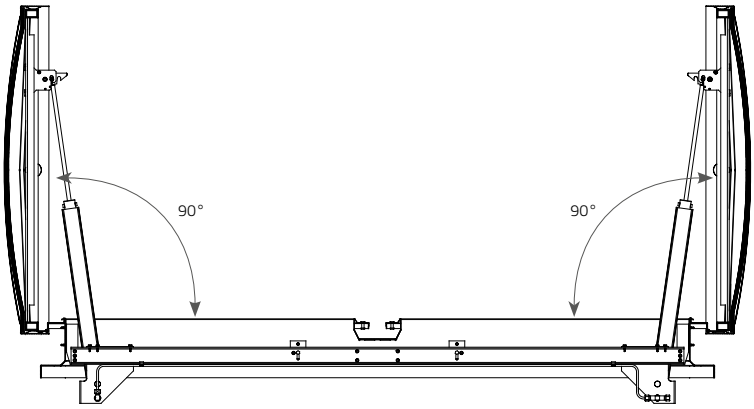

Bluecoif DV Pneu (version S)

Maximum overrun under upstand heel: 120 mm

Smoke ventilation | Pneumatic - Standard steel covering upstand

BLUECOIF DV PNEU

Infills

Accessories & options I 7
p 1 to 4

10 mm cellular PC (PCA)

10 mm cellular polycarbonate
Available in clear, opal(standard), opaque, Calor Control

16 mm cellular PC (PCA)

16 mm cellular polycarbonate
Available in opal, clear, opaque, Calor Control

INSULATED ALUMINIUM COVER

Standard

Accessories and Options

Accessories & options I 7
p 5 to 18

GRIDDLE

Fixed 15x15 mm, 1200-joule steel

GRILLE

Round fixed in 1200-joule steel

POSITION SWITCHES

Show the standby or safety position of an NSHEV. Factory mounted

THERMAL RELEASE MECHANISM

Automatically opens the vent if the temperature near the roof rises
Available in 140°C and 180°C.

VENTILATION

Pneumatic: full opening with the smoke ventilation pneumatic cylinders (ventilation 6 bar) (depending on air flow performance).

Electric: 230 V electrical motor for partial opening, 300 mm or 500 mm (to be fitted on site)

PAINTING

The upstand, grille, griddle or underside of the aluminium cover can be painted in standard RAL shades

RAL 9010 RAL 9005

Air flow finishing

- **S:** Straight upstand
- **M:** Oblique upstand + wind-breakers
- **L:** Oblique upstand + wind-breakers + shealth
- **XL:** Oblique upstand + foldaway windshields + shealth

© 2022/ Bluetek se reserva el derecho a modificar sin previo aviso la composición y las condiciones de uso de sus materiales según los conocimientos y las técnicas.
Los textos, fotografías e ilustraciones no son contractuales.

Smoke ventilation & Daily ventilation

Electric - Standard steel covering upstand

BLUECOIF ELEC

AVAILABLE 24V OR 48V

NATURAL LIGHTING

SMOKE VENTILATION

DAILY VENTILATION

Bluecoif Elec (standard version)

BLUETEK

- Optimised air flow performance with the oblique upstand
- No mechanism overrun under the upstand while opening
- Device pre-mounted in the factory, ready for the wiring

ELECTRIC CONTROL

Hyperion 24V

Coffret 48V

Standards and requirements

EN 1873
EN 12101-2

Low temperature
T (-15°)

Cycles
Re 1000 (fire)
Re 10,000 (partial ventilation)

Snow load
SL250/SL500

Operation
Type B
Opening + Closing

Static wind resistance
WL 1500 Pa

Temperature elevation
B 300

Characteristics

- 10 mm opal cellular PC (PCA) infill
- Straight covering upstand, 150 mm *(standard version)*
- Oblique covering upstand, 300 mm *(max version)*
- Electric thermofuse gauged at 100 °C

Smoke ventilation & Daily ventilation | Electric - Standard steel covering upstand

BLUECOIF ELEC

Technical characteristics

Dimensions			Performance			Characteristics						
Commercial dimensions (roof opening) W/L in cm	**Light dimensions** (high opening) W x L in cm	**Dimensions** in cm C/D (see sectional view)	**Av** (GA) in m²	**Useful area** (Aa) in m²		**Voltage U (V)**	**Cellular PC (PCA) 10. 16**		**CAIS** [1]		**DD** [1]	
				Std	Max		**SL 250** [2] **I (A)**	**SL 550** [2] **I (A)**	**SL 250** [2] **I (A)**	**SL 550** [2] **I (A)**	**SL 250** [2] **I (A)**	**SL 550** [2] **I (A)**
100/100	100 x 100	333 / 1115	**1.00**	**0.55**	—	24	4.5	4.5	4.5	4.5	4.5	4.5
110/110	100 x 100	490 / 1115	**1.21**	—	**0.90**		4.5	4.5	4.5	4.5	4.5	4.5
110/110	110 x 110	359 / 1212	**1.21**	**0.67**	—		4.5	4.5	4.5	4.5	4.5	4.5
120/120	110 x 110	516 / 1212	**1.44**	—	**1.07**		4.5	4.5	4.5	4.5	4.5	4.5
120/120	120 x 120	385 / 1308	**1.44**	**0.79**	—		4.5	4.5	4.5	4.5	4.5	4.5
130/130	120 x 120	542 / 1308	**1.69**	—	**1.27**		4.5	4.5	4.5	4.5	4.5	4.5
130/130	130 x 130	410 / 1405	**1.69**	**0.93**	—		4.5	4.5	4.5	4.5	4.5	4.5
140/140	130 x 130	567 / 1405	**1.96**	—	**1.47**		4.5	4.5	4.5	4.5	4.5	4.5
140/140	140/140	436 / 1501	**1.96**	**1.08**	—		4.5	4.5	4.5	4.5	4.5	4.5
150 / 150	140 x 140	593 / 1501	**2.25**	—	**1.29**		4.5	4.5	4.5	4.5	4.5	4.5
100/140	100 x 140	333 / 1115	**1.40**	**0.73**	—		4.5	4.5	4.5	4.5	—	—
100/150	100 x 150	333 / 1115	**1.50**	**0.78**	—		4.5	4.5	4.5	4.5	—	—
100/200	100 x 200	333 / 1115	**2.00**	**1.00**	—		4.5	4.5	4.5	4.5	—	—
120/140	110 x 130	516 / 1212	**1.68**	—	**1.26**		4.5	4.5	4.5	4.5	—	—
120/140	120 x 140	385 / 1308	**1.68**	**0.92**	—		4.5	4.5	4.5	4.5	—	—
120/160	110 x 150	516 / 1212	**1.92**	—	**1.44**		4.5	4.5	4.5	4.5	—	—
120/160	120 x 160	385 / 1308	**1.92**	**1.06**	—		4.5	4.5	4.5	4.5	—	—
120/170	110 x 160	516 / 1212	**2.04**	—	**1.53**		4.5	4.5	4.5	4.5	—	—
120/170	120 x 170	385 / 1308	**2.04**	**1.12**	—		4.5	4.5	4.5	4.5	—	—
120/180	110 x 170	516 / 1212	**2.16**	—	**1.62**		4.5	4.5	4.5	4.5	—	—
120/180	120 x 180	385 / 1308	**2.16**	**1.10**	—		4.5	4.5	4.5	4.5	—	—
120/200	110 x 190	516 / 1212	**2.40**	—	**1.80**		4.5	4.5	4.5	4.5	—	—
120/200	120 x 200	385 / 1308	**2.40**	**1.22**	—		4.5	4.5	4.5	4.5	—	—
120/220	120 x 220	385 / 1308	**2.64**	**1.35**	—		4.5	4.5	4.5	4.5	—	—
120/240	110 x 230	516 / 1212	**2.88**	—	**2.16**		4.5	4.5	4.5	4.5	—	—
120/240	120 x 240	385 / 1308	**2.88**	**1.47**	—		4.5	4.5	4.5	4.5	—	—
120/250	120 x 250	385 / 1308	**3.00**	**1.53**	—		4.5	4.5	4.5	4.5	—	—
140/160	130 x 150	567 / 1405	**2.24**	—	**1.68**		4.5	4.5	4.5	4.5	—	—
140/160	140 x 160	436 / 1501	**2.24**	**1.23**	—		4.5	4.5	4.5	4.5	—	—
140/200	130 x 190	567 / 1405	**2.80**	—	**2.10**		4.5	4.5	4.5	4.5	—	—
140/200	140 x 200	436 / 1501	**2.80**	**1.46**	—		4.5	4.5	4.5	4.5	—	—
150/200	140 x 190	593 / 1501	**3.00**	—	**2.25**		4.5	4.5	4.5	4.5	—	—

[1] CAIS: Standard insulated aluminium cover/DD: Double dome cupola
[2] SL 250: 0-400 m altitude/SL 500: 400-800 m altitude
— not available

Smoke ventilation & Daily ventilation | Electric - Standard steel covering upstand

BLUECOIF ELEC

Sectional view

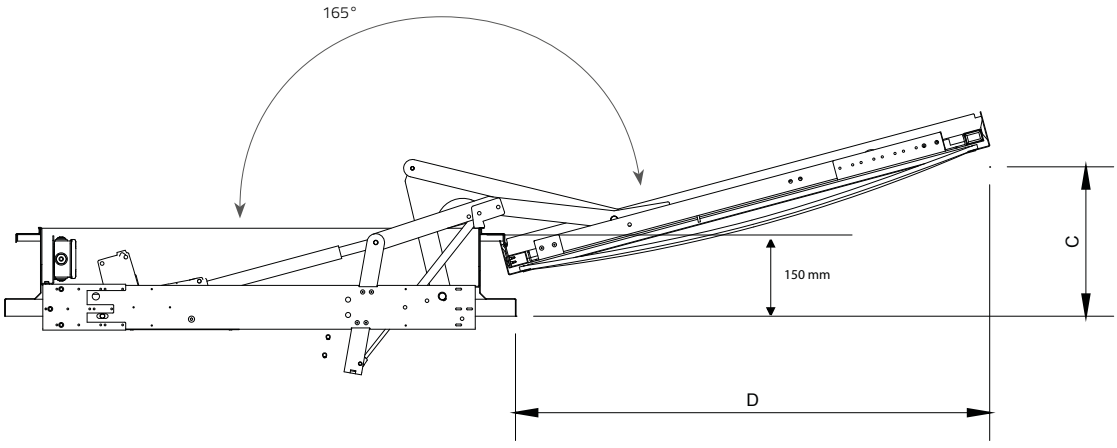

Bluecoif Elec (standard version)

Maximum overrun under upstand heel: 135 mm

Smoke ventilation & Daily ventilation | Electric - Standard steel covering upstand

BLUECOIF ELEC

Infills

Accessories & options I 7
p 1 to 4

10 mm cellular PC (PCA)

10 mm cellular polycarbonate
Available in clear, opal(standard), opaque, Calor Control

16 mm cellular PC (PCA)

16 mm cellular polycarbonate
Available in opal, clear, opaque, Calor Control

CUPOLA

Double wall, opal or clear in solid polycarbonate or polymethyl methacrylate

INSULATED ALUMINIUM COVER

Standard

Accessories and Options

Accessories & options I 7
p 5 to 18

GRIDDLE

Fixed 15x15 mm, 1200-joule steel

GRILLE

Round fixed in 1200-joule steel

POSITION SWITCH

Shows the standby or safety position of an NSHEV. Factory mounted

ELECTRIC RELEASE

Automatically opens the vent if the temperature near the roof rises
Available in 140°C

VENTILATION

Partial or total, with the smoke ventilation electrical motor

PAINTING

The upstand, grille, griddle or underside of the aluminium cover can be painted in standard RAL shades

RAL 9010 RAL 9005

Air flow finishing

WITHOUT SPOILERS (STANDARD VERSION)

SPOILERS (MAX. VERSION)

Galvanised steel elements that improve air flow performance

© 2022/ Bluetek se reserva el derecho a modificar sin previo aviso la composición y las condiciones de uso de sus materiales según los conocimientos y las técnicas.
Los textos, fotografías e ilustraciones no son contractuales.

Smoke ventilation

Pneumatic - Standard steel covering upstand

BLUECOIF PNEU

NATURAL LIGHTING

SMOKE VENTILATION

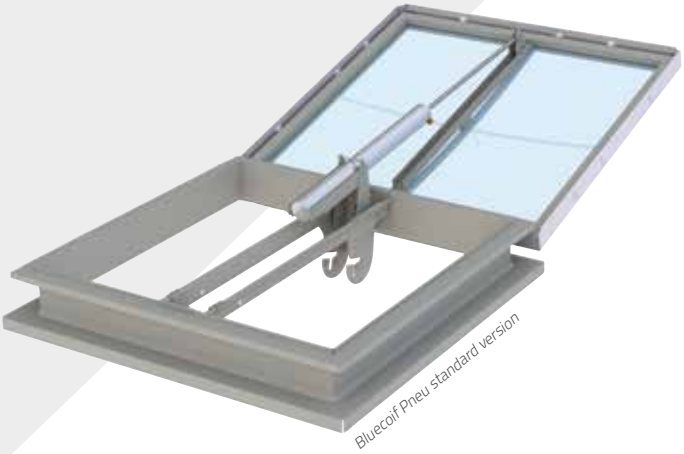

Bluecoif Pneu standard version

BLUETEK

- Optimised air flow performance with the oblique upstand
- No mechanism overrun under the upstand while opening
- Device pre-mounted in the factory, ready for the copper tube

CONTROL

pneumatic, CLIP type

Standards and requirements

EN 1873
EN 12101-2

Low temperature
T (-15°)

Cycles
Re 300 (fire)
Re 1000 (fire depending on infill and dim.)
Re 10,000 (partial or total ventilation depending on infill and dim)

Snow load
SL250/SL500

Operation
Type B
Opening + Closing

Static wind resistance
WL 1500 or
WL 3000 (≤ 2.53 m² and width ≤ 1.4m)

Temperature elevation
B 300

Characteristics

- 10 mm opal cellular PC (PCA) infill
- Straight covering upstand, 150 mm *(standard version)*
- Oblique covering upstand, 300 mm *(max version)*
- Pneumatic thermofuse gauged at 93 °C

Smoke ventilation | Pneumatic - Standard steel covering upstand

BLUECOIF PNEU

Technical characteristics

Dimensions			Performance			Characteristics											
						Operating pressure (bar)						Total volume of cylinders in litres (L)					
						Cellular PC (PCA) 10. 16		CAIS [1]		DD [1]		Cellular PC (PCA) 10. 16		CAIS [1]		DD [1]	
Commercial dimensions (roof opening) W/L in cm	**Light dimensions** (high opening) W x L in cm	**Dimensions** in cm C/D (see sectional view)	**Av** (GA) in m²	**Aa** (Useful area) in m² Std	Max	SL 250 [2]	SL 500 [2]	SL 250 [2]	SL 500 [2]	SL 250 [2]	SL 500 [2]	SL 250 [2]	SL 500 [2]	SL 250 [2]	SL 500 [2]	SL 250 [2]	SL 500 [2]
80 /80	80 x 80	281 / 922	**0.64**	**0.35**	—	15	20	15	25	15	25	0.73	0.73	0.73	0.73	0.73	0.73
90/90	80 x 80	438 / 922	**0.81**	—	**0.60**	15	20	15	25	15	25	0.73	0.73	0.73	0.73	0.73	0.73
	90 x 90	307 / 1018		**0.45**	—	15	25	20	15	20	15	0.73	0.73	0.73	1.43	0.73	1.43
100/100	90 x 90	464 / 1018	**1.00**	—	**0.74**	15	25	20	15	20	15	0.73	0.73	0.73	1.43	0.73	1.43
	100 x 100	333 / 1115		**0.55**	—	15	25	20	15	20	15	0.83	0.83	0.83	1.63	0.83	1.63
110/110	100 x 100	490 / 1115	**1.21**	—	**0.90**	15	25	20	15	20	15	0.83	0.83	0.83	1.63	0.83	1.63
	110 x 110	359 / 1212		**0.67**	—	20	20	25	20	25	20	0.83	1.63	0.83	1.63	0.83	1.63
120/120	110 x 110	516 / 1212	**1.44**	—	**1.07**	20	20	25	20	25	20	0.83	1.63	0.83	1.63	0.83	1.63
	120 x 120	395 / 1308		**0.79**	—	25	20	15	25	15	25	0.83	1.63	1.63	1.63	1.63	1.63
130/130	120 x 120	542 / 1308	**1.69**	—	**1.27**	25	20	15	25	15	25	0.83	1.63	1.63	1.63	1.63	1.63
	130 x 130	410 / 1405		**0.93**	—	15	25	20	25	20	25	1.63	1.63	1.63	2.10	1.63	2.10
140/140	130 x 130	567 / 1405	**1.96**	—	**1.47**	15	25	20	25	20	25	1.63	1.63	1.63	2.10	1.63	2.10
	140 x 140	436 / 1501		**1.08**	—	15	25	15	25	15	25	2.32	2.32	2.32	2.32	2.32	2.32
150/150	140 x 140	593 / 1501	**2.25**	—	**1.69**	15	25	15	25	15	25	2.32	2.32	2.32	2.32	2.32	2.32
	150 x 150	462 / 1598		**1.24**	—	15	25	20	25	20	25	2.32	2.32	2.32	2.93	2.32	2.93
160/160	150 x 150	619 / 1598	**2.56**	—	**1.95**	15	25	20	25	20	25	2.32	2.32	2.32	2.93	2.32	2.93
	160 x 160	488 / 1695		**1.38**	—	20	25	20	—	20	—	2.32	2.93	2.32	—	2.32	—
170/170	160 x 160	645 / 1695	**2.89**	—	**2.20**	20	25	20	—	20	—	2.32	2.93	2.32	—	2.32	—
	170 x 170	514 / 1791		**1.56**	—	20	—	25	—	25	—	2.32	—	2.32	—	2.32	—
180/180	170 x 170	671 / 1791	**3.24**	—	**2.46**	20	—	25	—	25	—	2.32	—	2.32	—	2.32	—
	180 x 180	540 / 1888		**1.72**	—	15	—	20	—	20	—	3.60	—	3.60	—	3.60	—
190/190	180 x 180	697 / 1888	**3.61**	—	**2.45**	15	—	20	—	20	—	3.60	—	3.60	—	3.60	—
200/200	190 x 190	566 / 1984	**4.00**	—	**2.72**	20	—	20	—	20	—	3.60	—	3.60	—	3.60	—
80 /130	80 x 130	281 / 922	**1.04**	**0.54**	—	20	15	20	15	20	15	0.73	1.43	0.73	1.43	0.73	1.43
100/140	90 x 130	464 / 1018	**1.40**	—	**1.05**	20	20	25	20	25	20	0.73	1.43	0.73	1.43	0.73	1.43
	100 x 140	333 / 1115		**0.73**	—	20	20	25	20	25	20	0.83	1.63	0.83	1.63	0.83	1.63
100/150	90 x 140	464 / 1018	**1.50**	—	**1.13**	20	20	25	20	25	20	0.73	1.43	0.73	1.43	0.73	1.43
	100 x 150	333 / 1115		**0.78**	—	20	20	25	20	25	20	0.83	1.63	0.83	1.63	0.83	1.63
100/200	90 x 190	464 / 1018	**2.00**	—	**1.50**	15	25	20	25	20	25	1.43	1.43	1.43	1.43	1.43	1.43
	100 x 200	333 / 1115		**1.00**	—	25	25	20	25	20	25	0.83	1.63	1.63	1.63	1.63	1.63
120/140	110 x 130	516 / 1212	**1.68**	—	**1.26**	25	20	25	20	25	20	0.83	1.63	0.83	1.63	0.83	1.63
	120 x 140	395 / 1308		**0.92**	—	15	25	20	25	20	25	1.63	1.63	1.63	1.63	1.63	1.63
120/160	110 x 150	516 / 1212	**1.92**	—	**1.44**	25	25	15	25	15	25	0.83	1.63	1.63	2.10	1.63	2.10
	120 x 160	395 / 1308		**1.06**	—	15	25	20	25	20	25	1.63	1.63	1.63	2.10	1.63	2.10
120/170	110 x 160	516 / 1212	**2.04**	—	**1.53**	25	25	15	25	15	25	0.83	1.63	1.63	2.10	1.63	2.10
	120 x 170	395 / 1308		**1.12**	—	20	25	20	25	20	25	1.63	2.10	1.63	2.10	1.63	2.10
120/180	110 x 170	516 / 1212	**2.16**	—	**1.62**	15	25	20	25	20	25	1.63	1.63	1.63	2.10	1.63	2.10
	120 x 180	395 / 1308		**1.10**	—	20	25	20	25	20	25	1.63	2.10	1.63	2.10	1.63	2.10
120/200	110 x 190	516 / 1212	**2.40**	—	**1.80**	15	25	20	25	20	25	1.63	1.63	1.63	2.10	1.63	2.10
	120 x 200	395 / 1308		**1.22**	—	20	25	25	—	25	—	1.63	2.10	1.63	—	1.63	—
120/220	110 x 200	516 / 1212	**2.64**	—	**1.98**	20	25	20	25	20	25	1.63	2.10	1.63	2.10	1.63	2.10
	120 x 220	395 / 1308		**1.35**	—	20	25	25	—	25	—	1.63	2.10	1.63	—	1.63	—
120/240	110 x 230	516 / 1212	**2.88**	—	**2.16**	20	25	25	25	25	25	1.63	2.10	1.63	2.10	1.63	2.10
	120 x 240	395 / 1308		**1.47**	—	25	—	25	—	25	—	1.63	—	1.63	—	1.63	—
120/250	110 x 240	516 / 1212	**3.00**	—	**2.13**	20	25	25	—	25	—	1.63	2.10	1.63	—	1.63	—
	120 x 250	395 / 1308		**1.53**	—	25	—	25	—	25	—	1.63	—	1.63	—	1.63	—
140/160	130 x 150	567 / 1405	**2.24**	—	**1.68**	20	25	20	25	20	25	1.63	2.10	1.63	2.10	1.63	2.10
	140 x 160	436 / 1501		**1.23**	—	15	25	20	25	20	25	2.32	2.32	2.32	2.93	2.32	2.93
140/200	130 x 190	567 / 1405	**2.80**	—	**2.10**	20	25	25	—	25	—	1.63	2.10	1.63	—	1.63	—
	140 x 200	436 / 1501		**1.46**	—	20	25	20	25	20	25	2.32	2.93	2.32	2.93	2.32	2.93
150/200	140 x 190	593 / 1501	**3.00**	—	**2.25**	20	25	20	25	20	25	2.32	2.93	2.32	2.93	2.32	2.93
	150 x 200	462 / 1598		**1.56**	—	20	25	25	—	25	—	2.32	2.93	2.32	—	2.32	—
160/200	150 x 190	619 / 1598	**3.20**	—	**2.43**	20	25	25	—	25	—	2.32	2.93	2.32	—	2.32	—
	160 x 200	488 / 1695		**1.70**	—	25	—	25	—	25	—	2.32	—	2.32	—	2.32	—

[1] CAIS: Standard insulated aluminium cover/DD: Double dome cupola
[2] SL 250: 0-400 m altitude/SL 500: 400-800 m altitude
— not available

Smoke ventilation | Pneumatic - Standard steel covering upstand

BLUECOIF PNEU

Sectional view

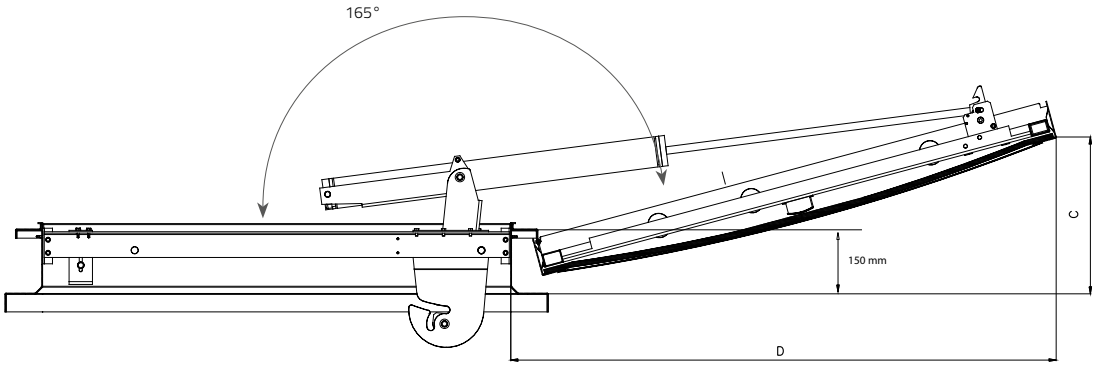

Bluecoif Pneu (standard version)

Maximum overrun under upstand heel: 250 mm

Smoke ventilation | Pneumatic - Standard steel covering upstand

BLUECOIF PNEU

Infills

Accessories & options I 7
p 1 to 4

10 mm cellular PC (PCA)

10 mm cellular polycarbonate
Available in clear, opal (standard), opaque, Calor Control

16 mm cellular PC (PCA)

16 mm cellular polycarbonate
Available in opal, clear, opaque, Calor Control

CUPOLA

Double wall, opal or clear in solid polycarbonate or polymethyl methacrylate

INSULATED ALUMINIUM COVER

Standard

Accessories and Options

Accessories & options I 7
p 5 to 18

GRIDDLE

Fixed 15x15 mm, 1200-joule steel

GRILLE

Round fixed in 1200-joule steel

POSITION SWITCH

Shows the standby or safety position of an NSHEV. Factory mounted

THERMAL RELEASE MECHANISM

Automatically opens the vent if the temperature near the roof rises
Available in 140°C and 180°C.

VENTILATION

Pneumatic: full opening with the smoke ventilation pneumatic cylinders (ventilation 6 bar) (depending on dimensions and infill)

Electric: 230 V electrical motor for partial opening, 300 mm or 500 mm (to be fitted on site)

PAINTING

The upstand, grille, griddle or underside of the aluminium cover can be painted in standard RAL shades

RAL 9010 RAL 9005

Air flow finishing

WITHOUT SPOILERS (STANDARD VERSION)

SPOILERS (MAX. VERSION)

Galvanised steel elements that improve air flow performance

© 2022/ Bluetek se reserva el derecho a modificar sin previo aviso la composición y las condiciones de uso de sus materiales según los conocimientos y las técnicas.
Los textos, fotografías e ilustraciones no son contractuales.

adexsi
Opening new perspectives //

+33 2 47 55 36 82

contact@adexsi.com
www.adexsi.com

bluetek

Smoke ventilation

Winch - Standard steel covering upstand

BLUECOIF WINCH

NATURAL LIGHTING

SMOKE VENTILATION

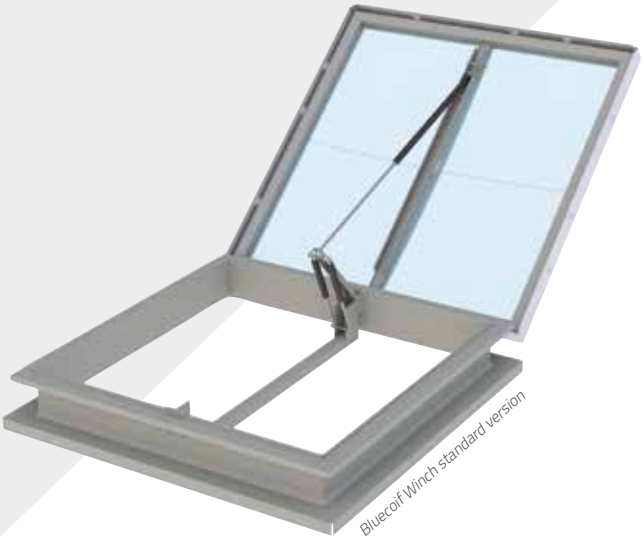

Bluecoif Winch standard version

BLUETEK

- Ideal for staircases
- Optimised air flow performance with the oblique upstand
- No mechanism overrun under the upstand while opening
- Device pre-mounted in the factory, ready for the winch cable

CONTROL

mechanical, WINCH SI type

Standards and requirements

EN 1873
EN 12101-2

Low temperature
T (0°)

Cycles
Re 300 (fire)
Re 10,000 (ventilation)

Snow load
SL250/SL500

Operation
Type B
Opening + Closing

Static wind resistance
WL 1500
WL 3000 (≤ 2 m²)

Temperature elevation
B 300

Characteristics

- 10 mm opal cellular PC (PCA) infill
- Straight covering upstand, 150 mm *(standard version)*
- Oblique covering upstand, 300 mm *(max version)*
- Mechanical thermofuse gauged at 100 °C

Smoke ventilation | Winch - Standard steel covering upstand

BLUECOIF WINCH

Technical characteristics

Dimensions			Performance			Characteristics					
						Snow load					
						Cellular PC (PCA) 10. 16		CAIS [1]		DD [1]	
Commercial dimensions (roof opening) W/L in cm	**Light dimensions** (high opening) W x L in cm	**Dimensions** in cm C/D (see sectionan view)	**Av** (GA) in m²	**Aa** (useful area) in m² Std	Max	SL 250 [2]	SL 500 [2]	SL 250 [2]	SL 500 [2]	SL 250 [2]	SL 500 [2]
90/90	90 x 90	715 / 841	**0.81**	**0.41**	—	•	•	•	•	•	•
100/100	90 x 90	872 / 841	**1.00**	—	**0.74**	•	•	•	•	•	•
100/100	100 x 100	780 / 918	**1.00**	**0.50**	—	•	•	•	•	•	•
110/110	100 x 100	937 / 918	**1.21**	—	**0.90**	•	•	•	•	•	•
110/110	110 x 110	844 / 995	**1.21**	**0.61**	—	•	•	•	•	•	•
120/120	110 x 110	1001 / 995	**1.44**	—	**1.07**	•	•	•	•	•	•
120/120	120 x 120	908 / 1071	**1.44**	**0.72**	—	•	—	•	—	•	—
130/130	120 x 120	1065 / 1071	**1.69**	—	**1.27**	•	—	•	—	•	—
130/130	130 x 130	972 / 1148	**1.69**	**0.85**	—	•	—	•	—	•	—
140/140	130 x 130	1129 / 1148	**1.96**	—	**1.47**	•	—	•	—	•	—
140/140	140 x 140	1037 / 1224	**1.96**	**0.98**	—	•	—	—	—	—	—
150/150	140 x 140	1194 / 1224	**2.25**	—	**1.69**	•	—	—	—	—	—
100/140	100 x 140	780 / 918	**1.40**	**0.70**	—	•	—	•	—	•	—
100/140	90 x 130	872 / 841	**1.40**	—	**1.05**	•	•	•	•	•	•
100/150	100 x 150	780 / 918	**1.50**	**0.75**	—	•	—	•	—	•	—
100/150	90 x 140	872 / 841	**1.50**	—	**1.13**	•	•	•	•	•	•
100/200	100 x 200	780 / 918	**2.00**	**0.76**	—	•	—	•	—	•	—
100/200	90 x 190	872 / 841	**2.00**	—	**1.50**	•	—	•	—	•	—
120/140	120 x 140	908 / 1071	**1.68**	**0.84**	—	•	—	•	—	•	—
120/140	110 x 130	1001 / 995	**1.68**	—	**1.26**	•	—	•	—	•	—
120/160	120 x 160	908 / 1071	**1.92**	**0.75**	—	•	—	•	—	—	—
120/160	110 x 150	1001 / 995	**1.92**	—	**1.44**	•	—	•	—	•	—
120/170	120 x 170	908 / 1071	**2.04**	**0.80**	—	•	—	•	—	—	—
120/170	110 x 160	1001 / 995	**2.04**	—	**1.53**	•	—	•	—	•	—
120/180	120 x 180	908 / 1071	**2.16**	**0.82**	—	•	—	•	—	—	—
120/180	110 x 170	1001 / 995	**2.16**	—	**1.62**	•	—	•	—	•	—
120/200	110 x 190	1001 / 995	**2.40**	—	**1.80**	•	—	•	—	—	—
120/220	110 x 210	1001 / 995	**2.64**	—	**1.98**	•	—	•	—	—	—
120/240	110 x 230	1001 / 995	**2.88**	—	**2.16**	•	—	—	—	—	—
140/160	130 x 150	1129 / 1148	**2.24**	—	**1.68**	•	—	•	—	—	—

[1] CAIS: Standard insulated aluminium cover/DD: Double dome cupola
[2] SL 250: 0-400 m altitude/SL 500: 400-800 m altitude
● *available,* — *not available*

Smoke ventilation | Winch - Standard steel covering upstand

BLUECOIF WINCH

Sectional view

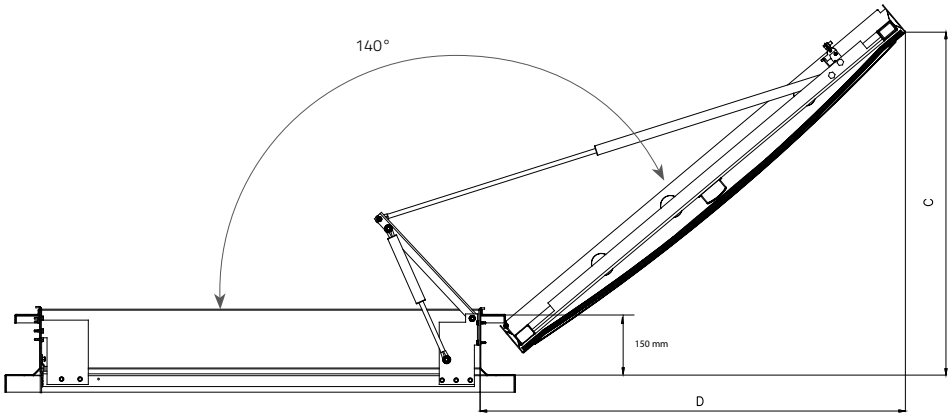

Bluecoif Winch (standard version)

Maximum overrun under upstand heel: 40 mm

Smoke ventilation | Winch - Standard steel covering upstand

BLUECOIF WINCH

Infills

Accessories & options I 7
p 1 to 4

10 mm cellular PC (PCA)

10 mm cellular polycarbonate
Available in clear, opal(standard), opaque, Calor Control

16 mm cellular PC (PCA)

16 mm cellular polycarbonate
Available in opal, clear, opaque, Calor Control

CUPOLA

Double wall, opal or clear in solid polycarbonate or polymethyl methacrylate

INSULATED ALUMINIUM COVER

Standard

Accessories and Options

Accessories & options I 7
p 5 to 18

GRIDDLE

Fixed 15x15 mm, 1200-joule steel

GRILLE

Round fixed in 1200-joule steel

POSITION SWITCH

Shows the standby or safety position of an NSHEV. Factory mounted

THERMAL RELEASE MECHANISM

Automatically opens the vent if the temperature near the roof rises.
Possible with 140°C

VENTILATION

Partial 300 mm.

PAINTING

The upstand, grille, griddle or underside of the aluminium cover can be painted in standard RAL shades, please enquire

RAL 9010 RAL 9005

Air flow finishing

WITHOUT SPOILERS (STANDARD VERSION)

SPOILERS (MAX. VERSION)

Galvanised steel elements that improve air flow performance

© 2022/ Bluetek se reserva el derecho a modificar sin previo aviso la composición y las condiciones de uso de sus materiales según los conocimientos y las técnicas.
Los textos, fotografías e ilustraciones no son contractuales.

adexsi
Opening new perspectives //

+33 2 47 55 36 82

contact@adexsi.com
www.adexsi.com

bluetek

Smoke ventilation, Roof access & Daily ventilation

Electric - Standard steel covering upstand

BLUECOIF ELEC + ACCESS

NATURAL LIGHTING | SMOKE VENTILATION | ROOF ACCESS | DAILY VENTILATION

BLUETEK

- Easy roof access with remote roof access mechanism
- No actuator overrun under the upstand while opening
- Device pre-mounted in the factory, ready for the wiring

CONTROL

electric, HYPERION type (24V)

Standards and requirements

EN 1873
EN 12101-2

Low temperature
T (0°)

Cycles
Re 300 (fire)
Re 10,000 (partial ventilation)

Snow load
SL250

Operation
Type B
Opening + Closing

Static wind resistance
WL 1500

Temperature
elevation
B 300

Characteristics

- 10 mm opal cellular PC (PCA) infill
- Straight covering upstand, 110 mm
- Electric thermofuse gauged at 100 °C

Smoke ventilation, Roof access & Daily ventilation | Electric - Standard steel covering upstand

BLUECOIF ELEC + ACCESS

Technical characteristics

Dimensions			Performance		Characteristics				
Commercial dimensions (roof opening) W/L in cm	**Light dimensions** (high opening) W x L in cm	**Dimensions** in cm C/D (see sectional view)	**Av** (GA) in m²	**Aa** (useful area) in m²	**Voltage U (V)**	**Cellular PC (PCA) 10, 16**		**CAIS** [1]	
				Std		**SL 250** [2] **I (A)**	**SL 500** [2] **I (A)**	**SL 250** [2] **I (A)**	**SL 500** [2] **I (A)**
100/100	100 x 100	1050/635	**1.00**	**0.21**	24	2.5	4	4	4
120/120	120 x 120	1224/735	**1.44**	**0.30**	24	2.5	—	4	—

[1] CAIS: Standard insulated aluminium cover
[2] SL 250: 0-400 m altitude
● *available,* — *not available*

Smoke ventilation, Roof access & Daily ventilation | Electric - Standard steel covering upstand

BLUECOIF ELEC + ACCESS

Sectional view

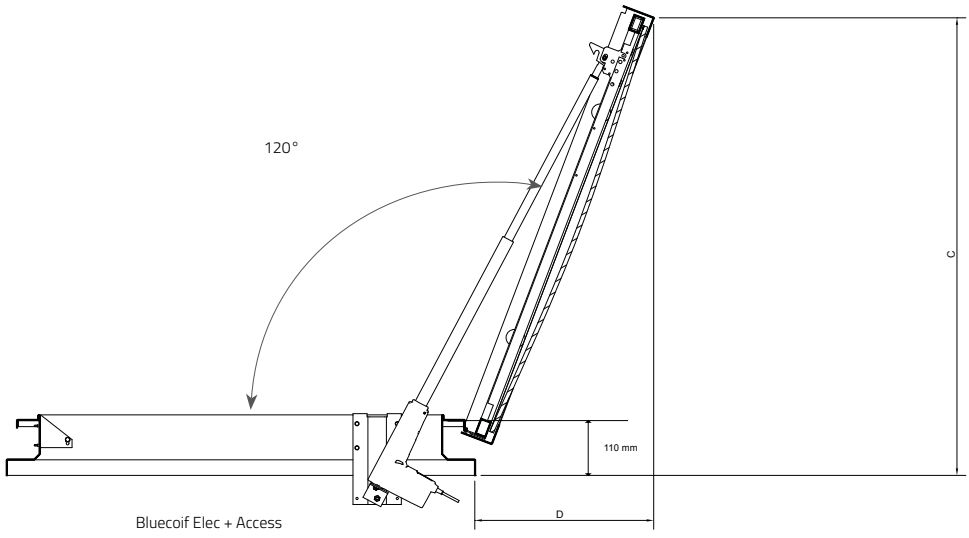

Maximum overrun under upstand heel: 85 mm

Smoke ventilation, Roof access & Daily ventilation | Electric - Standard steel covering upstand

BLUECOIF ELEC + ACCESS

Infills

Accessories & options I 7
p 1 to 4

10 mm cellular PC (PCA)

10 mm cellular polycarbonate
Available in clear, opal (standard), opaque, Calor Control

16 mm cellular PC (PCA)

16 mm cellular polycarbonate
Available in opal, clear, opaque, Calor Control

INSULATED ALUMINIUM COVER

Standard

Accessories and Options

Accessories & options I 7
p 5 to 18

GRIDDLE

15x15 mm opening frame in 1200-joule steel

GRILLE

Round opening in 1200-joule steel

ROOF ACCESS BAR

Galvanised steel bar that makes access to the roof easier and safer

LADDER SUSPENSION BAR

Galvanised steel tube that may be used to support any type of ladder for access to the roof

Ladder available in our Control binder

POSITION SWITCH

Shows the standby or safety position of an NSHEV. Factory mounted

ELECTRIC RELEASE

Automatically opens the vent if the temperature near the roof rises
Available in 140°C.

VENTILATION

Partial or total, with the smoke ventilation electrical motor

PAINTING

The upstand, grille, griddle or underside of the aluminium cover can be painted in standard RAL shades

RAL 9010 RAL 9005

Air flow finishing

WITHOUT SPOILERS (STANDARD VERSION)

© 2022/ Bluetek se reserva el derecho a modificar sin previo aviso la composición y las condiciones de uso de sus materiales según los conocimientos y las técnicas.
Los textos, fotografías e ilustraciones no son contractuales.

Smoke ventilation & Roof access

Pneumatic - Standard steel covering upstand

BLUECOIF PNEU + ACCESS

NATURAL LIGHTING

SMOKE VENTILATION

ROOF ACCESS

BLUETEK

- Easy roof access with remote roof access mechanism
- No actuator overrun under the upstand while opening
- Device pre-mounted in the factory, ready for the copper tube

CONTROL

pneumatic, CLIP type

Standards and requirements

EN 1873
EN 12101-2

Low temperature
T (-15°)

Cycles
Re 300 (fire)

Snow load
SL250/SL550

Operation
Type B
Opening + Closing

Static wind resistance
WL 1500

Temperature
elevation
B 300

Characteristics

- 10 mm opal cellular PC (PCA) infill
- Straight covering upstand, 110 mm
- Pneumatic thermofuse gauged at 93 °C

Smoke ventilation & Roof access | Pneumatic - Standard steel covering upstand

BLUECOIF PNEU + ACCESS

Technical characteristics

Dimensions			Performances		Caractéristics							
Commercial dimensions (roof opening) W/L in cm	**Light dimensions** (high opening) W x L in cm	**Dimensions** in cm C/D (see section oppositeal view	**Av** (GA) in m²	**Aa** (useful area) in m²	**Pression** (bar)				**Total volume of cylinders in litres** (L)			
					PCA 16, 20		**PCA 32, BSL, CAIS** [1]		**PCA 16, 20**		**PCA 32, BSL, CAIS, PI (16)** [1]	
				Std	**SL250** [2]	**SL550** [2]	**SL250** [2]	**SL550** [2]	**SL250** [2]	**SL550** [2]	**SL250** [2]	**SL550** [2]
100/100	100 x 100	987 / 922	**1,00**	**0,50**	12	22	13	23	1,67	1,67	1,67	1,67
110/110	110 x 110	1051 / 998	**1,21**	**0,61**	16	—	18	—	1,67	—	1,67	—
120/120	120 x 120	1116 / 1075	**1,44**	**0,72**	11	19	12	—	2,07	2,07	2,07	—

[1] CAIS: Standard insulated aluminium cover
[2] SL 250: 0-400 m altitude/SL 550: 400-800 m altitude
— not available

Smoke ventilation & Roof access | Pneumatic - Standard steel covering upstand

BLUECOIF PNEU + ACCESS

Sectional view

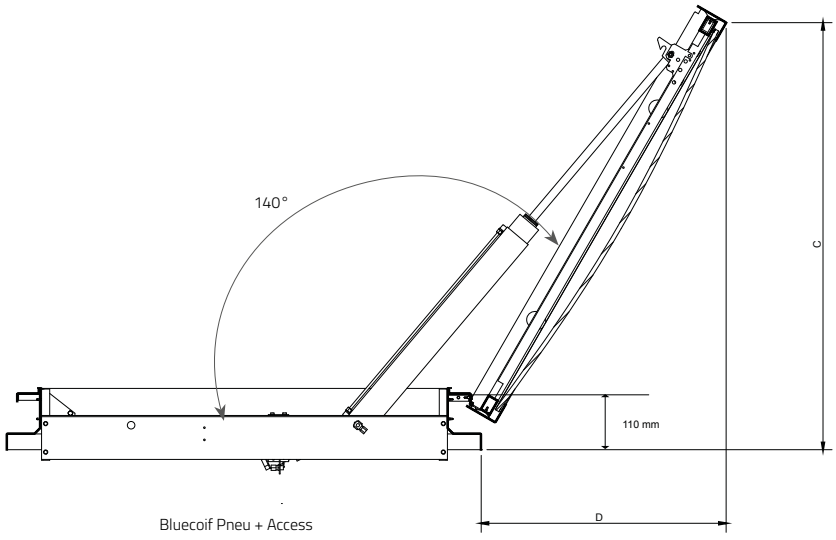

Maximum overrun under upstand heel: 45 mm

Smoke ventilation & Roof access | Pneumatic - Standard steel covering upstand

BLUECOIF PNEU + ACCESS

Infills

Accessories & options I 7
p 1 to 4

10 mm cellular PC (PCA)

10 mm cellular polycarbonate
Available in clear, opal (standard), opaque, Calor Control

16 mm cellular PC (PCA)

16 mm cellular polycarbonate
Available in opal, clear, opaque, Calor Control

INSULATED ALUMINIUM COVER

Standard

Accessories and Options

Accessories & options I 7
p 5 to 18

GRIDDLE

15x15 mm opening frame in 1200-joule steel

GRILLE

Round opening in 1200-joule steel

ROOF ACCESS BAR

Galvanised steel bar that makes access to the roof easier and safer

LADDER SUSPENSION BAR

Galvanised steel tube that may be used to support any type of ladder for access to the roof

Ladder available in our Control binder

POSITION SWITCH

Shows the standby or safety position of an NSHEV. Factory mounted

THERMAL RELEASE MECHANISM

Automatically opens the vent if the temperature near the roof rises
Available in 140°C.

PAINTING

The upstand, grille, griddle or underside of the aluminium cover can be painted in standard RAL shades

RAL 9010 RAL 9005

Air flow finishing

WITHOUT SPOILERS (STANDARD VERSION)

© 2022/ Bluetek se reserva el derecho a modificar sin previo aviso la composición y las condiciones de uso de sus materiales según los conocimientos y las técnicas.
Los textos, fotografías e ilustraciones no son contractuales.

adexsi
Opening new perspectives //
+33 2 47 55 36 82
contact@adexsi.com
www.adexsi.com
bluetek

Smoke ventilation & Roof access

Winch - Standard steel covering upstand

BLUECOIF WINCH + ACCESS

NATURAL LIGHTING
SMOKE VENTILATION
ROOF ACCESS

Bluecoif Winch + Access

BLUETEK

- Ideal for staircases
- Easy roof access with remote roof access mechanism
- No actuator overrun under the upstand while opening
- Device pre-mounted in the factory, ready for the winch cable

CONTROL
mechanical, WINCH SI type

Standards and requirements

EN 1873
EN 12101-2

Low temperature
T (0°)

Cycles
Re 300 (fire)
Re 10,000 (partial ventilation)

Snow load
SL250

Operation
Type B
Opening + Closing

Static wind resistance
WL 1500 or
WL 3000 (≤ 1 m²)

Temperature
elevation
B 300

Characteristics

- 10 mm opal cellular PC (PCA) infill
- Straight covering upstand, 110 mm
- Mechanical thermofuse gauged at 100 °C

Smoke ventilation & Roof access | Winch - Standard steel covering upstand

BLUECOIF WINCH + ACCESS

Technical characteristics

Dimensions			Performance		Characteristics	
					Snow load	
Commercial dimensions (roof opening) W/L in cm	**Light dimensions** (high opening) W x L in cm	**Dimensions** in cm C/D (see sectional view)	**Av** (GA) in m²	**Aa** (useful area) in m²	**Cellular PC (PCA) 10, 16**	**CAIS, DD** [1]
				Std	**SL 250** [2]	**SL 250** [2]
90/90	90 X 90	872/841	**0.81**	**0.41**	●	●
100/100	100 x 100	937/918	**1.00**	**0.50**	●	●
110/110	110 x 110	1001/995	**1.21**	**0.61**	●	—
120/120	120 x 120	1065/1071	**1.44**	**0.72**	●	—

[1] CAIS: Standard insulated aluminium cover/DD: Double dome cupola
[2] SL 250: 0-400 m altitude
● *available,* — *not available*

Smoke ventilation & Roof access | Winch - Standard steel covering upstand

BLUECOIF WINCH + ACCESS

Sectional view

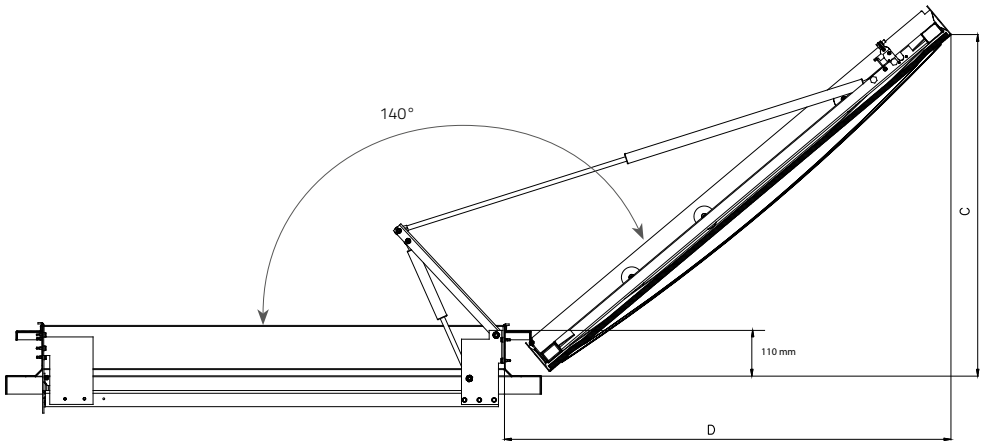

Bluecoif Winch + Access

Maximum overrun under upstand heel: 80 mm

Smoke ventilation & Roof access | Winch - Standard steel covering upstand

BLUECOIF WINCH + ACCESS

Infills

Accessories & options I 7
p 1 to 4

10 mm cellular PC (PCA)

10 mm cellular polycarbonate
Available in clear, opal (standard), opaque, Calor Control

16 mm cellular PC (PCA)

16 mm cellular polycarbonate
Available in opal, clear, opaque, Calor Control

CUPOLA

Double wall, opal or clear in solid polycarbonate or polymethyl methacrylate

INSULATED ALUMINIUM COVER

Standard

Accessories and Options

Accessories & options I 7
p 5 to 18

GRIDDLE

15x15 mm opening frame in 1200-joule steel

GRILLE

Round opening in 1200-joule steel

ROOF ACCESS BAR

Galvanised steel bar that makes access to the roof easier and safer

LADDER SUSPENSION BAR

Galvanised steel tube that may be used to support any type of ladder for access to the roof

Ladder available in our Control binder

POSITION SWITCH

Shows the standby or safety position of an NSHEV. Factory mounted

THERMAL RELEASE MECHANISM

Automatically opens the vent if the temperature near the roof rises
Available in 140°C.

PAINTING

The upstand, grille, griddle or underside of the aluminium cover can be painted in standard RAL shades

RAL 9010 RAL 9005

Air flow finishing

WITHOUT SPOILERS (STANDARD VERSION)

© 2022/ Bluetek se reserva el derecho a modificar sin previo aviso la composición y las condiciones de uso de sus materiales según los conocimientos y las técnicas.
Los textos, fotografías e ilustraciones no son contractuales.