Smoke control & Ventilation

Electric - Thermal improvement base

THERM

NEW DIMENSIONS
AVAILABLE 24V OR 48V

BLUEBAC THERM ELEC

OVERHEAD LIGHTING
VENTILATION
SMOKE CONTROL

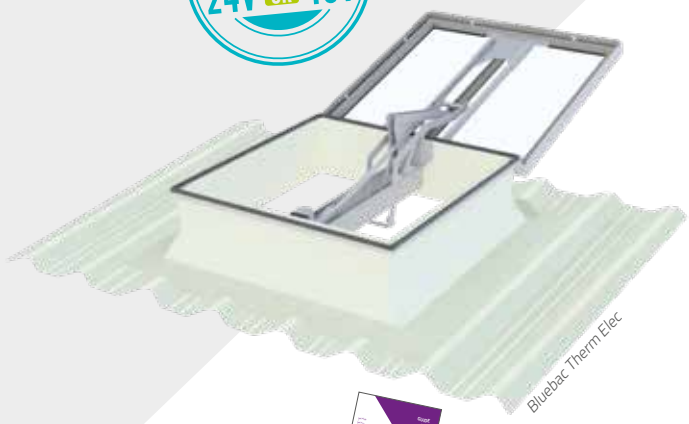

BLUETEK

- → Device pre-mounted in the factory, ready for the electrical cable
- → **Reduces heat loss** thanks to improved base insulation

Check the availability of profiles in our guide

ELECTRIC CONTROL

Hyperion 24V

Coffret 48V

Standards and requirements

EN 1873
EN 12101-2

Low temperature T (-15°)

Cycles Re 1000 (fire) Re 10,000 (partial ventilation)

Snow load SL250/SL500

Operation Type B Opening + Closing

Static wind resistance WL 1500 Pa

Temperature elevation B 300

Characteristics

Urc: 1.4 W/m².K (100/200, 300 mm high, BSL, B1)

- **Arc = 4.3**
- **AP = 0.4 m³/h/m**
- **I4 = 0.05 m³/h/m**

- 16 mm opal cellular PC infill
- Tubular seal on the perimeter of the frame
- Thermal electrical release, calibrated to 100°C
- Fibreglass reinforced polyester base, outer walls coated with gel coat, and 19 mm insulation.

Smoke control & Ventilation | Electric - Thermal improvement base

BLUEBAC THERM ELEC

Technical characteristics

Dimensions			Performances				Characteristics							
							24 V				48 V			
Commercial dimensions (roof opening) W/L in cm	**Light dimensions** (high opening) W x L in cm	**Part numbers***	**Av** (GA) in m²	**Aa** (useful area) in m²		**Urc** (W/m²K)*	**Cellular PC 16, 20, 32, BSL, PI (16) CAIS** [1]		**PI(20) ,TD** [1]		**PCA 16, PCA 20, PCA 32, BSL, PI (16) CAIS** [1]		**PI(20) ,TD** [1]	
				Std	Max		**SL250** [2] **I (A)**	**SL550** [2] **I (A)**	**SL250** [2] **I (A)**	**SL550** [2] **I (A)**	**SL250** [2] **I (A)**	**SL550** [2] **I (A)**	**SL250** [2] **I (A)**	**SL550** [2] **I (A)**
110/110	100 x 100	B1S	**1,21**	**0,75**	**0,90**	**1,9**	4,5		4,5		2,5		2,5	
130/130	120 x 120	B1S	**1,69**	**1,03**	**1,27**		4,5		4,5		2,5		2,5	
150/150	140 x 140	B1S	**2,25**	**1,37**	**1,69**		4,5		4,5		2,5		2,5	
100/200	100 x 200	DRS	**2,00**	**1,00**	**1,26**		4,5		—		2,5		—	
150/180	130 x 160	B2S	**2,70**	**1,62**	**1,81**		4,5		—		2,5		—	

** DR: straight upstand - B1: tapered upstand, 5 cm on each side (commercial dimensions = light dimensions +10 cm) - B2: tapered upstand, 10 cm on each side (commercial dimensions = light dimensions +20 cm)*

**** Performance of device with 16 mm cellular PC**

[1] CAIS: Standard insulated aluminium cover/PI 16: Pearl Inside 16 mm/PI (20): Pearl Inside 20 mm/BSL: Luminous sunshade/TD: Triple dome cupola

[2] SL 250: 0-400 m altitude/SL 500: 400-800 m altitude

— not available

Smoke control & Ventilation | Electric - Thermal improvement base

BLUEBAC THERM ELEC

Technical sections

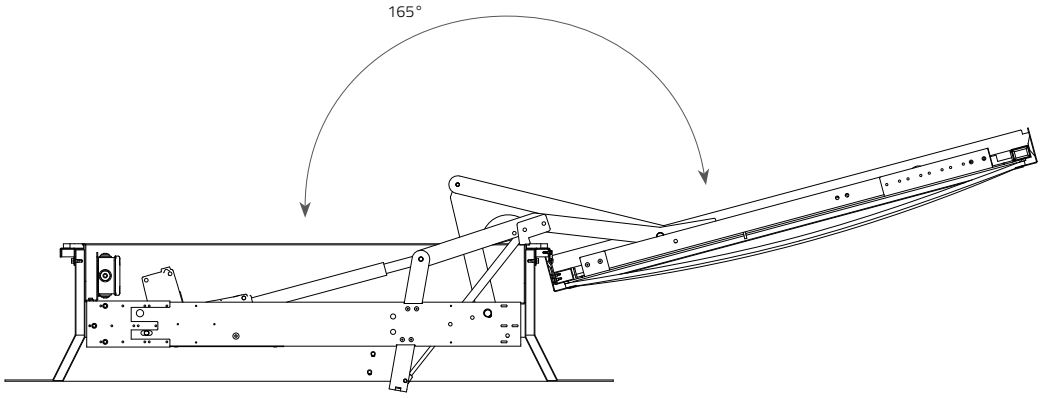

Bluebac Therm Elec B1

EFFICIENT SOLUTIONS

BSL (luminous sunshade)

- Reduces sun factor by 35%*
- Improves the thermal performance of the rooflight
- Cuts glare and light marks on the floor
- Available in clear and opal

Pearl Inside

- Improves acoustic performance Lia: 65 dB, Rw: 28 dB (0,-2)
- New cellular PC concept with incorporated glass microbeads
- Crystalline effect for an incomparable appearance

** compared to 16 mm opal cellular PC*

Smoke control & Ventilation | Electric - Thermal improvement base

BLUEBAC THERM ELEC

Infill

16 mm cellular PC

16 mm cellular polycarbonate
Available in opal (standard), clear, opaque, Calor Control

20 mm cellular PC

20 mm cellular polycarbonate
Available in Opal, clear, Calor Control

32 mm cellular PC

32 mm cellular polycarbonate
Available in opal, clear, opaque, Calor Control

CUPOLA

Triple wall, opal or clear in solid polycarbonate
or polymethyl methacrylate

INSULATED ALUMINIUM COVER

Standard

Accessories and Options

BARS

Fixed 15x15 mm, 1200-joule steel

GRILLE

Round fixed in 1200-joule steel

POSITION SWITCH

Shows the standby or safety position
of an NSHEV.
Factory mounted

ELECTRIC RELEASE

Automatically opens the vent if the temperature
near the roof rises
Available in 140°C.

VENTILATION

Pneumatic: full opening with the smoke control actuator (ventilation 6 bar) (depending on dimensions and infill)

Electric: 230 V electric actuator for partial opening, 300 mm or 500 mm (to be fitted on the site)

PAINT & GEL COAT

The gel coat on the base and the paint for the grille or bars are available in standard RAL shades

RAL 9010 RAL 9005

Air flow finishing

WITHOUT SPOILERS (STANDARD VERSION)

SPOILERS (MAX. VERSION)

Galvanised steel elements that improve air flow performance

© July 2022/Bluetek reserves the right to change the composition and conditions of use of its materials without notice, based on advancing knowledge and techniques. Text, photographs and illustrations not contractually binding.

Smoke control

Pneumatic - Thermal improvement base

THERM

BLUEBAC THERM PNEU

OVERHEAD LIGHTING

SMOKE CONTROL

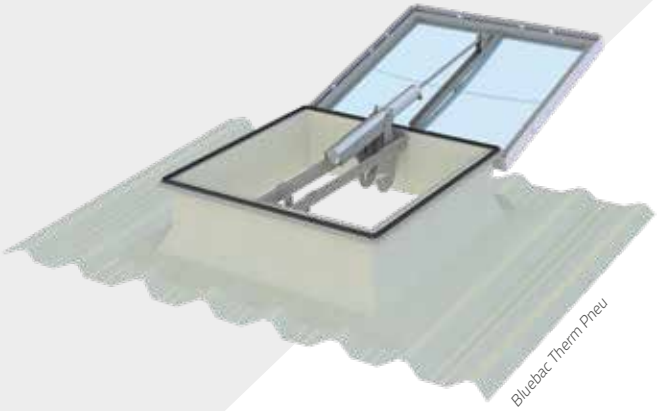

BLUETEK

- Device pre-mounted in the factory, ready for the copper tube
- **Reduces heat loss** thanks to improved base insulation

Check the availability of profiles in our guide

CONTROL

pneumatic, CLIP type

Standards and requirements

EN 1873
EN 12101-2

Low temperature
T (-15°)

Cycles
Re 300 (fire)
Re 1000 (fire depending on infill and dim.)
Re 10,000 (partial or total ventilation depending on infill and dim)

Snow load
SL250/SL500

Operation
Type B
Opening + Closing

Static wind resistance
WL 1500 or
WL 3000 (≤ 2.53 m²)

Temperature elevation
B 300

Characteristics

Urc: 1.4 W/m².K (180/180, 300 mm high, BSL, B2S)

- **Arc = 5,3**
- **AP = 0,5 m³/h/ml**
- **I4 = 0,06 m³/h/ml**

- 16 mm opal cellular PC infill
- Tubular seal on the perimeter of the frame
- Thermal release mechanism calibrated to 93°C
- Fibreglass reinforced polyester base, outer walls coated with gel coat, and 19 mm insulation.

Smoke control | Pneumatic - Thermal improvement base

BLUEBAC THERM PNEU

Technical characteristics

Dimensions			Performances				Characteristics											
Commercial dimensions (roof opening) W/L in cm	**Light dimensions** (high opening) W x L in cm	**Part numbers***	**Av** (GA) in m²	**Aa** (useful area) in m²		**Urc** (W/m²K) **	**Operating pressure** (bar)						**Total volume of actuators in litres** (L)					
							Cellular PC 16, 20		**Cellular PC 32** [1]		**PI, TD, BSL, CAIS** [1]		**Cellular PC 16, 20**		**Cellular PC 32** [1]		**PI, TD, BSL, CAIS** [1]	
				Std	Max		**SL 250** [2]	**SL 500** [2]	**SL 250** [2]	**SL 500** [2]	**SL 250** [2]	**SL 500** [2]	**SL 250** [2]	**SL 500** [2]	**SL 250** [2]	**SL 500** [2]	**SL 250** [2]	**SL 500** [2]
110/110	100 x 100	B1S	**1,21**	**0,75**	**0,90**		15	25	15	25	20	15	0,83	0,83	0,83	0,83	0,83	1,63
120/120	110 x 110	B2S	**1,44**	**0,88**	**0,94**		15	25	15	25	20	15	0,83	0,83	0,83	0,83	0,83	1,63
130/130	120 x 120	B1S	**1,69**	**1,03**	**1,27**		25	20	25	20	15	25	0,83	1,63	0,83	1,63	1,63	1,63
150/150	140 x 140	B1S	**2,25**	**1,37**	**1,69**		15	25	15	25	20	25	2,32	2,32	2,32	2,32	1,63	2,10
180/180	160 x 160	B2S	**3,24**	**1,88**	**2,27**	**1,9**	20	25	20	25	15	25	2,32	2,93	2,32	2,93	2,32	2,32
100/200	100 x 200	DRS	**2,00**	**1,00**	**1,26**		25	25	20	25	20	25	0,83	1,63	1,63	1,63	1,63	2,10
120/240	100 x 220	B2S	**2,88**	**1,61**	**1,96**		15	25	15	25	20	—	1,63	1,63	1,63	1,63	2,32	—
150/180	150 x 180	DRS	**2,70**	**1,40**	**1,73**		20	25	20	25	20	25	1,63	2,10	1,63	2,10	1,63	1,63
150/180	130 x 160	B2S	**2,70**	**1,62**	**1,81**		20	25	20	—	20	—	2,32	2,93	2,32	—	2,32	—

** DRS: straight upstand - B1S: tapered upstand, 5 cm on each side (commercial dimensions = light dimensions +10 cm) - B2S: tapered upstand, 10 cm on each side (commercial dimensions = light dimensions +20 cm)*

**** Performance of device with 16 mm cellular PC**

[1] CAIS: Standard insulated aluminium cover/TD: Triple dome cupola

[2] SL 250: 0-400 m altitude/SL 500: 400-800 m altitude

— not available

Smoke control | Pneumatic - Thermal improvement base

BLUEBAC THERM PNEU

Technical sections

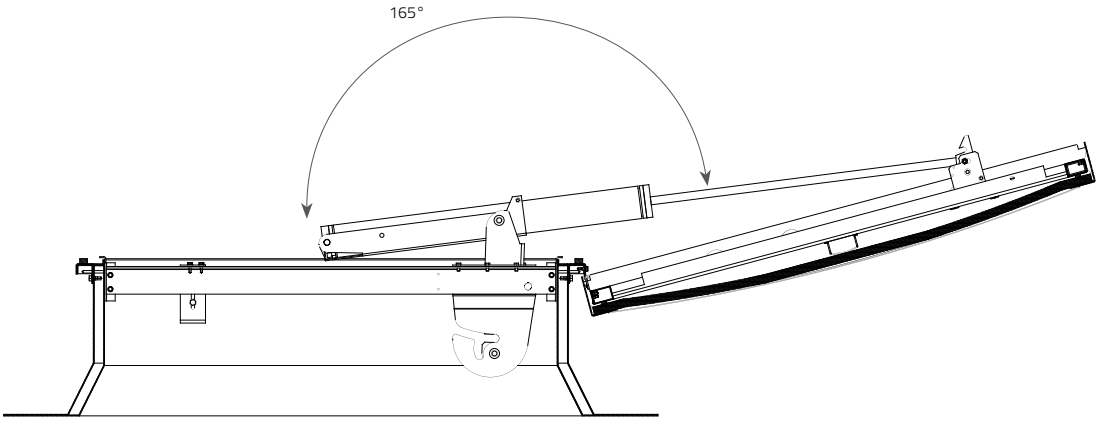

Bluebac Therm Pneu (standard version) B1

EFFICIENT SOLUTIONS

BSL (luminous sunshade)

- Reduces sun factor by 35%*
- Improves the thermal performance of the rooflight
- Cuts glare and light marks on the floor
- Available in clear and opal

Pearl Inside

- Improves acoustic performance Lia: 65 dB, Rw: 28 dB (0,-2)
- New cellular PC concept with incorporated glass microbeads
- Crystalline effect for an incomparable appearance

** compared to 16 mm opal cellular PC*

Smoke control | Pneumatic - Thermal improvement base

BLUEBAC THERM PNEU

Infill

16 mm cellular PC

16 mm cellular polycarbonate
Available in opal (standard), clear, opaque, Calor Control

20 mm cellular PC

20 mm cellular polycarbonate
Available in Opal, clear, Calor Control

32 mm cellular PC

32 mm cellular polycarbonate
Available in opal, clear, opaque, Calor Control

CUPOLA

Triple wall, opal or clear in solid polycarbonate
or polymethyl methacrylate

INSULATED ALUMINIUM COVER

Standard

Accessories and Options

BARS

Fixed 15x15 mm, 1200-joule steel

GRILLE

Round fixed in 1200-joule steel

POSITION SWITCH

Shows the standby or safety position
of an NSHEV.
Factory mounted

THERMAL RELEASE MECHANISM

Automatically opens the vent if the temperature
near the roof rises
Available in 140°C and 180°C.

VENTILATION

Pneumatic: full opening with the smoke control actuator (ventilation 6 bar) (depending on dimensions and infill)

Electric: 230 V electric actuator for partial opening, 300 mm or 500 mm (to be fitted on the site)

PAINT & GEL COAT

The gel coat on the base and the paint for the grille or bars are available in standard RAL shades

RAL 9010 RAL 9005

Air flow finishing

WITHOUT SPOILERS (STANDARD VERSION)

SPOILERS (MAX. VERSION)

Galvanised steel elements that improve air flow performance

© July 2022/Bluetek reserves the right to change the composition and conditions of use of its materials without notice, based on advancing knowledge and techniques. Text, photographs and illustrations not contractually binding.

Smoke control

Winch - Thermal improvement base

THERM

BLUEBAC THERM WINCH

OVERHEAD LIGHTING

SMOKE CONTROL

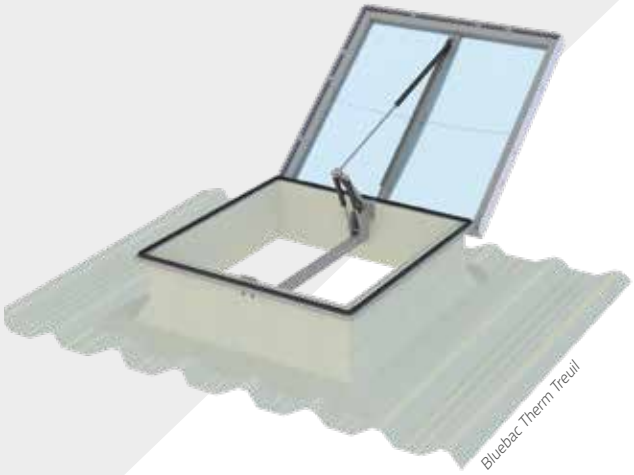
Bluebac Therm Treuil

BLUETEK

- Ideal for staircases
- Device pre-mounted in the factory, ready for the winch cable
- **Reduces heat loss** thanks to improved base insulation

Check the availability of profiles in our guide

CONTROL

mechanical, WINCH SI type

Standards and requirements

EN 1873
EN 12101-2

Low temperature
T (0 °)

Cycles
Re 300 (fire)
Re 10,000 (ventilation)

Snow load
SL250/SL500

Operation
Type B
Opening + Closing

Static wind resistance
WL 1500
WL 3000 (≤ 2 m²)

Temperature elevation
B 300

Characteristics

Urc: 1.4 W/m².K (100/200, 300 mm high, BSL, DRS)

- **Arc = 4.5**
- **AP = 0.4 m³/h/m**
- **I4 = 0.05 m³/h/m**

- 16 mm opal cellular PC infill
- Tubular seal on the perimeter of the frame
- Thermal fuse calibrated to 100°C
- Fibreglass reinforced polyester base, outer walls coated with gel coat, and 19 mm insulation.

Smoke control | Winch - Thermal improvement base

BLUEBAC THERM WINCH

Technical characteristics

Dimensions			Performances				Characteristics						
							Snow load						
							Cellular PC 16, 20		Cellular PC 32, CAIS [1]		PI, BSL [1]		TD
Commercial dimensions (roof opening) W/L in cm	**Light dimensions** (high opening) W x L in cm	**Part numbers***	**Av** (GA) in m²	**Useful area** (Aa) in m²		**Urc** (W/m²K) **							
				Std	Max		SL250 [2]	SL500 [2]	SL250 [2]	SL500 [2]	SL250 [2]	SL500 [2]	SL250 [2]
110/110	100 x 100	B1S	**1,21**	**0,61**	**0,90**	**1,9**	•	•	•	•	•	•	•
130/130	120 x 120	B1S	**1,69**	**0,85**	**1,27**		•	—	•	—	•	—	•
150/150	140 x 140	B1S	**2,25**	**1,13**	**1,69**		•	—	—	—	—	—	—
100/200	100 x 200	DRS	**2,00**	**0,76**	**1,26**		•	—	•	—	•	—	•
120/240	100 x 220	B2S	**2,88**	**1,15**	**1,93**		•	—	•	—	—	—	—
150/180	130 x 160	B2S	**2,70**	**1,35**	**1,84**		•	—	—	—	—	—	—

** DRS: straight upstand - B1S: tapered upstand, 5 cm on each side (commercial dimensions = light dimensions +10 cm) - B2S: tapered upstand, 10 cm on each side (commercial dimensions = light dimensions +20 cm)*

**** Performance of device with 16 mm cellular PC**

[1] CAIS: Standard insulated aluminium cover/PI: Pearl Inside 16 or 20 mm/DD: Double dome cupola/BSL: Luminous sunshade

[2] SL 250: 0-400 m altitude/SL 500: 400-800 m altitude

● *available,* — *not available*

Smoke control | Winch - Thermal improvement base

BLUESTEEL THERM WINCH

Technical sections

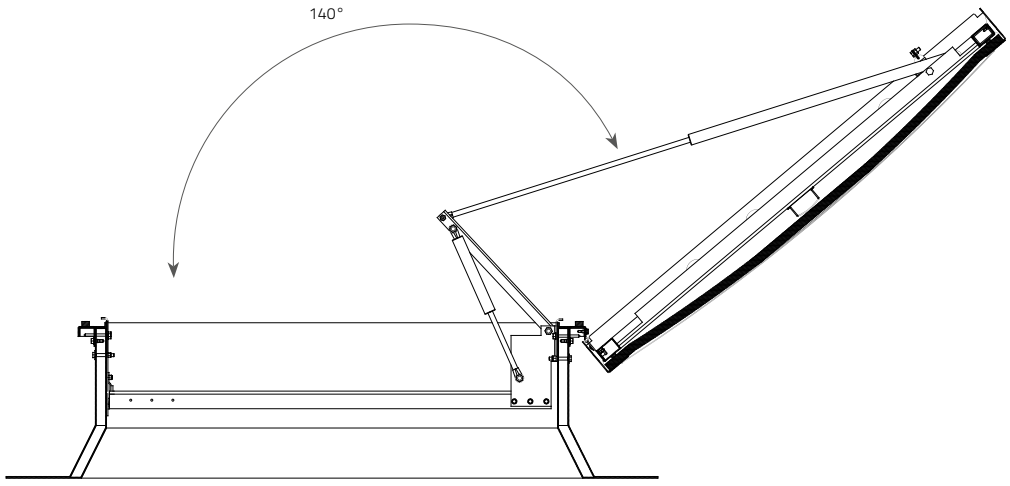

Bluesteel Therm Winch (standard version) B1

EFFICIENT SOLUTIONS

BSL (luminous sunshade)

- Reduces sun factor by 35%*
- Improves the thermal performance of the rooflight
- Cuts glare and light marks on the floor
- Available in clear and opal

Pearl Inside

- Improves acoustic performance Lia: 65 dB, Rw: 28 dB (0,-2)
- New cellular PC concept with incorporated glass microbeads
- Crystalline effect for an incomparable appearance

** compared to 16 mm opal cellular PC*

Smoke control | Winch - Thermal improvement base

BLUEBAC THERM WINCH

Infill

16 mm cellular PC

16 mm cellular polycarbonate
Available in opal (standard), clear, Calor Control

20 mm cellular PC

20 mm cellular polycarbonate
Available in Opal, clear, Calor Control

32 mm cellular PC

32 mm cellular polycarbonate
Available in opal, clear, opaque, Calor Control

CUPOLA

Triple wall, opal or clear in solid polycarbonate or polymethyl methacrylate

INSULATED ALUMINIUM COVER

Standard

Accessories and Options

BARS

Fixed 15x15 mm, 1200-joule steel

GRILLE

Round fixed in 1200-joule steel

POSITION SWITCH

Shows the standby or safety position of an NSHEV. Factory mounted

THERMAL FUSE

Automatically opens the vent if the temperature near the roof rises.
Possible with 140°C

VENTILATION

Partial 300 mm

PAINT & GEL COAT

The gel coat on the base and the paint for the grille or bars are available in standard RAL shades

RAL 9010 RAL 9005

Air flow finishing

WITHOUT SPOILERS (STANDARD VERSION)

SPOILERS (MAX. VERSION)

Galvanised steel elements that improve air flow performance

© July 2022/Bluetek reserves the right to change the composition and conditions of use of its materials without notice, based on advancing knowledge and techniques. Text, photographs and illustrations not contractually binding.

Smoke control, Roof access & Ventilation

THERM

Electric - Thermal improvement base

BLUEBAC THERM ELEC + ACCESS

OVERHEAD LIGHTING | ROOF ACCESS | VENTILATION | SMOKE CONTROL

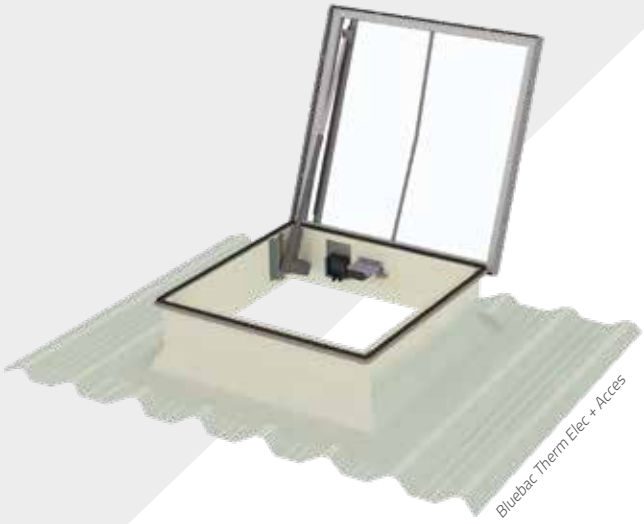

BLUETEK

- → Easy roof access with remote roof access mechanism
- → Device pre-mounted in the factory, ready for the electrical cable
- → **Reduces heat loss** thanks to improved base insulation

Check the availability of profiles in our guide

CONTROL

electric, HYPERION type

Standards and requirements

EN 1873
EN 12101-2

Low temperature T (0 °)

Cycles Re 1000 (fire) Re 10,000 (partial ventilation)

Snow load SL250/SL500

Operation Type B Opening + Closing

Static wind resistance WL 1500

Temperature elevation B 300

Characteristics

Urc: 1.4 W/m² K (110/110, 300 mm high, BSL, B1)

- **Arc = 2.7**
- **AP = 0.4 m³/h/m**
- **I4 = 0.05 m³/h/m**

- 16 mm opal cellular PC infill
- Tubular seal on the perimeter of the frame
- Thermal electrical release, calibrated to 100 °C
- Fibreglass reinforced polyester base, outer walls coated with gel coat, and 19 mm insulation

Smoke control, Roof access & Ventilation | Electric - Thermal improvement base

BLUEBAC THERM ELEC + ACCESS

Technical characteristics

Dimensions			Performance			Characteristics				
Commercial dimensions (roof opening) W/L in cm	**Light dimensions** (high opening) W x L in cm	**Part numbers***	**Av** (GA) in m²	**Aa** (useful area) in m²	**Urc** (W/m²K) **	**Voltage U (V)**	**Cellular PC 16, 20**		**Cellular PC 32, BSL, PI (16), CAIS** [1]	
				Std			**SL 250** [2] **I (A)**	**SL 500** [2] **I (A)**	**SL 250** [2] **I (A)**	**SL 500** [2] **I (A)**
110/110	100 x 100	B1S	**1.21**	**0.25**	**1.9**	24	2.5	4	4	4

** DRS: straight upstand - B1S: tapered upstand, 5 cm on each side (commercial dimensions = light dimensions +10 cm) - B2S: tapered upstand, 10 cm on each side (commercial dimensions = light dimensions +20 cm)*

**** Performance of device with 16 mm cellular PC**

[1] CAIS: Standard insulated aluminium cover/PI (16): Pearl Inside 16 mm/BSL: Luminous sunshade

[2] SL 250: 0-400 m altitude

— not available

Smoke control, Roof access & Ventilation | Electric - Thermal improvement base

BLUEBAC THERM ELEC + ACCESS

Technical sections

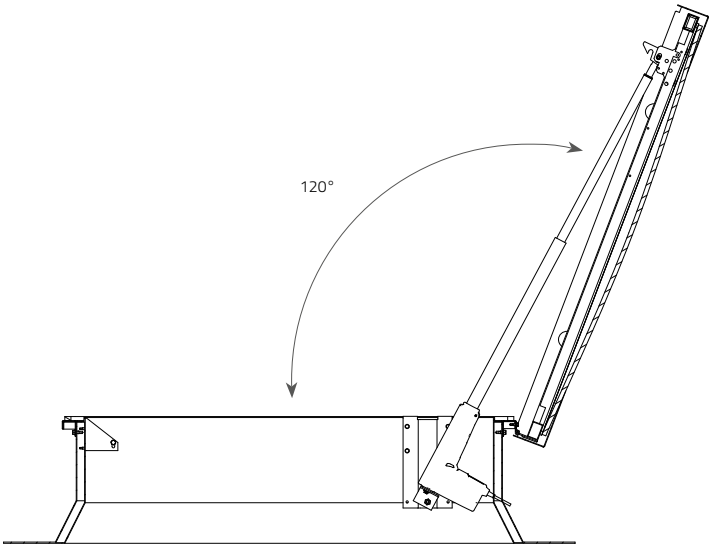

Bluebac Therm Elec + Accès B1

EFFICIENT SOLUTIONS

BSL (luminous sunshade)

- Reduces sun factor by 35%*
- Improves the thermal performance of the rooflight
- Cuts glare and light marks on the floor
- Available in clear and opal

Pearl Inside

- Improves acoustic performance Lia: 65 dB, Rw: 28 dB (0,-2)
- New cellular PC concept with incorporated glass microbeads
- Crystalline effect for an incomparable appearance

** compared to 16 mm opal cellular PC*

Smoke control, Roof access & Ventilation | Electric - Thermal improvement base

BLUEBAC THERM ELEC + ACCESS

Infill

16 mm cellular PC

16 mm cellular polycarbonate
Available in opal (standard), clear, opaque, Calor Control

20 mm cellular PC

20 mm cellular polycarbonate
Available in Opal, clear, Calor Control

32 mm cellular PC

32 mm cellular polycarbonate
Available in opal, clear, opaque, Calor Control

INSULATED ALUMINIUM COVER

Standard

Accessories and Options

BARS

15x15 mm opening frame in 1200-joule steel

GRILLE

Round opening in 1200-joule steel

LADDER SUSPENSION BAR

Galvanised steel tube that may be used to support any type of ladder for access to the roof

Ladder available in our Control binder

POSITION SWITCH

Shows the standby or safety position of an NSHEV. Factory mounted

ELECTRIC RELEASE

Automatically opens the vent if the temperature near the roof rises
Available in 140°C.

PAINT & GEL COAT

The gel coat on the base and the paint for the grille or bars are available in standard RAL shades

RAL 9010 RAL 9005

Air flow finishing

WITHOUT SPOILERS (STANDARD VERSION)

SPOILERS (MAX. VERSION)

Galvanised steel elements that improve air flow performance

© July 2022/Bluetek reserves the right to change the composition and conditions of use of its materials without notice, based on advancing knowledge and techniques. Text, photographs and illustrations not contractually binding.

Smoke control & Roof access

Pneumatic - Thermal improvement base

THERM

BLUEBAC THERM PNEU + ACCESS

OVERHEAD LIGHTING
ROOF ACCESS
SMOKE CONTROL

BLUETEK

- Device pre-mounted in the factory, ready for the copper tube
- **Reduces heat loss** thanks to improved base insulation

Check the availability of profiles in our guide

CONTROL
pneumatic, CLIP type

Standards and requirements

EN 1873
EN 12101-2

Low temperature
T (-15°)

Cycles
Re 300 (fire)
Re 10,000 (partial ventilation)
Re 10,000 (full ventilation)
(≤ 2 m² and depending on infill)

Snow load
SL250/SL500

Operation
Type B
Opening + Closing

Static wind resistance
WL 1500 or
WL 3000 (≤ 2.53 m²)

Temperature
elevation
B 300

Characteristics

Urc : 1,4 W/m² K (110/110, 300mm hight, BSL, B1S)

- **Arc = 2,7**
- **AP = 0,4 m³/h/ml**
- **I4 = 0,05 m³/h/ml**

- 16 mm opal cellular PC infill
- Tubular seal on the perimeter of the frame
- Thermal release mechanism calibrated to 93°C
- Fibreglass reinforced polyester base, outer walls coated with gel coat, and 19 mm insulation.

Smoke control & Roof access | Pneumatic - Thermal improvement base

BLUEBAC THERM PNEU + ACCESS

Technical characteristics

Dimensions			Performances			Characteristics							
Commercial dimensions (roof opening) W/L in cm	**Light dimensions** (high opening) W x L in cm	**Part numbers***	**Av** (GA) in m²	**Useful area** (Aa) in m²	**Urc** (W/m²K) **	**Operating pressure** (bar)				**Total volume of actuators in litres** (L)			
						Cellular PC 16, 20		**Cellular PC 32, BSL, PI (16), CAIS** [1]		**Cellular PC 16, 20**		**Cellular PC 32, BSL, PI (16), CAIS** [1]	
				Std		**SL250** [2]	**SL550** [2]	**SL250** [2]	**SL550** [2]	**SL250** [2]	**SL550** [2]	**SL250** [2]	**SL550** [2]
110/110	100 x 100	B1S	**1,21**	**0,61**	**1,9**	12	22	13	23	1,67	1,67	1,67	1,67
130/130	120 x 120	B1S	**1,69**	**0,85**	**1,9**	11	19	12	—	2,07	2,07	2,07	—

** DRS: straight upstand - B1S: tapered upstand, 5 cm on each side (commercial dimensions = light dimensions +10 cm) - B2S: tapered upstand, 10 cm on each side (commercial dimensions = light dimensions +20 cm)*
**** Performance of device with 16 mm cellular PC**
[1] CAIS: Standard insulated aluminium cover/PI (16): Pearl Inside 16 mm/BSL: Luminous sunshade
[2] SL 250: 0-400 m altitude/SL 550: 400-800 m altitude
— not available

Smoke control & Roof access | Pneumatic - Thermal improvement base

BLUEBAC THERM PNEU + ACCESS

Technical sections

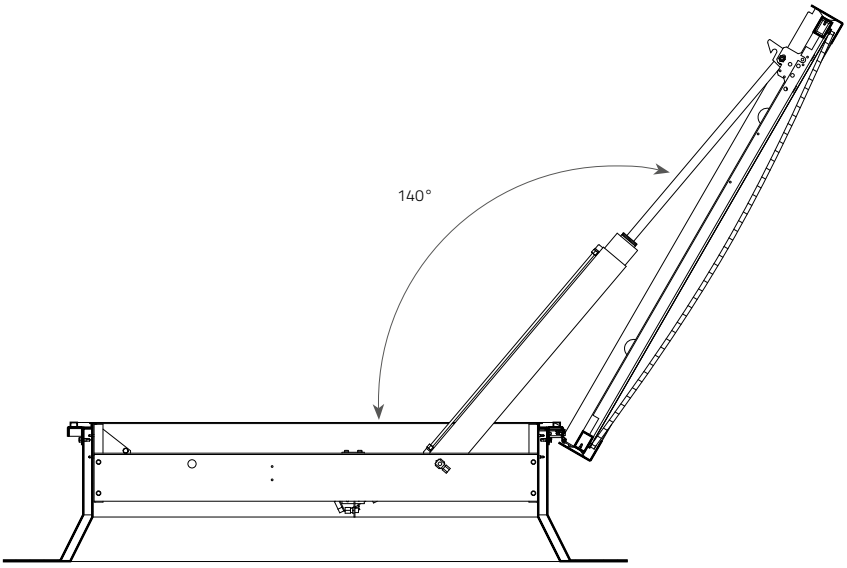

Bluebac Therm Pneu + accès (version Standard) B1

EFFICIENT SOLUTIONS

BSL (luminous sunshade)

- Reduces sun factor by 35%*
- Improves the thermal performance of the rooflight
- Cuts glare and light marks on the floor
- Available in clear and opal

Pearl Inside

- Improves acoustic performance Lia: 65 dB, Rw: 28 dB (0,-2)
- New cellular PC concept with incorporated glass microbeads
- Crystalline effect for an incomparable appearance

** compared to 16 mm opal cellular PC*

Smoke control & Roof access | Pneumatic - Thermal improvement base

BLUEBAC THERM PNEU + ACCESS

Infill

16 mm cellular PC

16 mm cellular polycarbonate
Available in opal (standard), clear, opaque, Calor Control

20 mm cellular PC

20 mm cellular polycarbonate
Available in Opal, clear, Calor Control

32 mm cellular PC

32 mm cellular polycarbonate
Available in opal, clear, opaque, Calor Control

INSULATED ALUMINIUM COVER

Standard

Accessories and Options

BARS

15x15 mm opening frame in 1200-joule steel

GRILLE

Round opening in 1200-joule steel

LADDER SUSPENSION BAR

Galvanised steel tube that may be used to support any type of ladder for access to the roof

Ladder available in our Control binder

POSITION SWITCH

Shows the standby or safety position of an NSHEV. Factory mounted

THERMAL RELEASE MECHANISM

Automatically opens the vent if the temperature near the roof rises
Available in 140°C and 180°C.

PAINT & GEL COAT

The gel coat on the base and the paint for the grille or bars are available in standard RAL shades

RAL 9010 RAL 9005

Air flow finishing

WITHOUT SPOILERS (STANDARD VERSION)

SPOILERS (MAX. VERSION)

Galvanised steel elements that improve air flow performance

© July 2022/Bluetek reserves the right to change the composition and conditions of use of its materials without notice, based on advancing knowledge and techniques. Text, photographs and illustrations not contractually binding.

Smoke control & Roof access

Electric - Thermal improvement base

THERM

BLUEBAC THERM WINCH + ACCESS

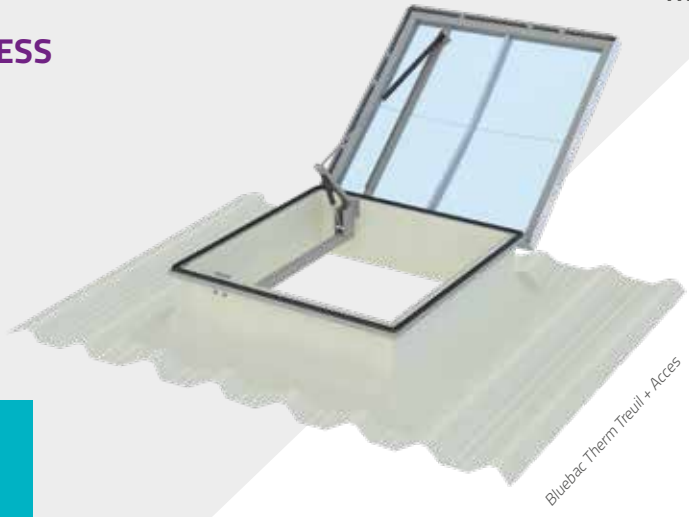

OVERHEAD LIGHTING | ROOF ACCESS | SMOKE CONTROL

BLUETEK

- Ideal for staircases
- Easy roof access with remote roof access mechanism
- Device pre-mounted in the factory, ready for the winch cable
- **Reduces heat loss** thanks to improved base insulation

Check the availability of profiles in our guide

CONTROL

mechanical, WINCH SI type

Standards and requirements

EN 1873
EN 12101-2

Low temperature
T (-15°)

Cycles
Re 1000 (fire)
Re 10,000 (partial ventilation)
Re 10,000 (full ventilation)
(≤ 2 m² and depending on infill)

Snow load
SL250/SL500

Operation
Type B
Opening + Closing

Static wind resistance
WL 1500 or
WL 3000 (≤ 1 m²)

Temperature
elevation
B 300

Characteristics

Urc : 1,4 W/m².K (110/110, 300mm hight, BSL, B1)

- **Arc = 2,7**
- **AP = 0,4 m³/h/ml**
- **I4 = 0,05 m³/h/ml**

- 16 mm opal cellular PC infill
- Tubular seal on the perimeter of the frame
- Thermal fuse, calibrated to 100 °C
- Fibreglass reinforced polyester base, outer walls coated with gel coat, and 19 mm insulation

Smoke control & Roof access | Winch - Thermal improvement base

BLUEBAC THERM WINCH + ACCESS

Technical characteristics

Dimensions			Performances				Characteristics	
							Snow load	
							Cellular PC 16, 20	Cellular PC 32, PI, DD, CAIS, BSL [1]
							SL250 [2]	SL250 [2]
Commercial dimensions (roof opening) W/L in cm	**Light dimensions** (high opening) W x L in cm	**Part numbers** *	**Av** (GA) in m²	**Useful area** (Aa) in m² Std	**Useful area** (Aa) in m² Max	**Urc** (W/m²K) **		
110/110	100 x 100	B1S	**1,21**	**0,61**	—	**1,9**	•	•
130/130	120	B1S	**1,69**	**0,85**	—	**1,9**	•	—

** DRS: straight upstand - B1S: tapered upstand, 5 cm on each side (commercial dimensions = light dimensions +10 cm) - B2S: tapered upstand, 10 cm on each side (commercial dimensions = light dimensions +20 cm)*

**** Performance of device with 16 mm cellular PC**

[1] CAIS: Standard insulated aluminium cover/PI: Pearl Inside 16 or 20 mm/BSL: Luminous sunshade/DD: Double dome

[2] SL 250: 0-400 m altitude

● *available,* — *not available*

Smoke control & Roof access | Winch - Thermal improvement base

BLUESTEEL THERM WINCH + ACCESS

Technical sections

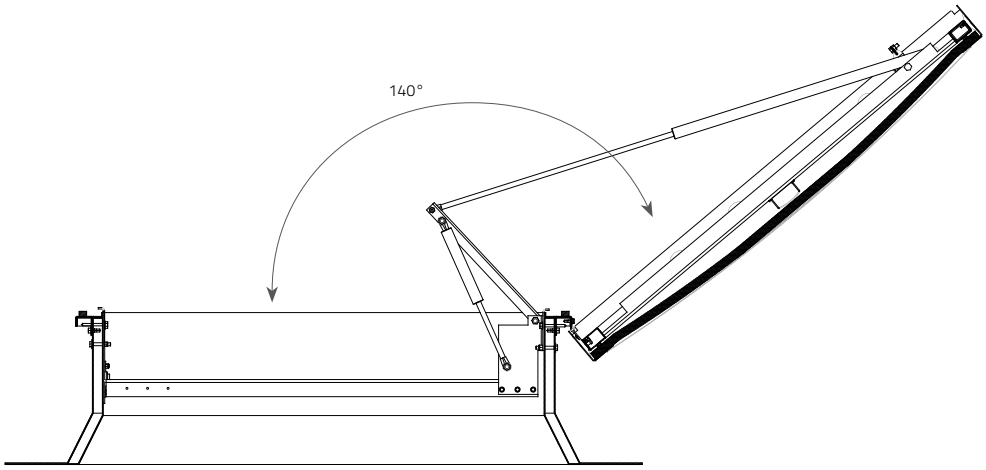

Bluesteel ThermTreuil + Accès B1

EFFICIENT SOLUTIONS

BSL (luminous sunshade)

- Reduces sun factor by 35%*
- Improves the thermal performance of the rooflight
- Cuts glare and light marks on the floor
- Available in clear and opal

Pearl Inside

- Improves acoustic performance Lia: 65 dB, Rw: 28 dB (0,-2)
- New cellular PC concept with incorporated glass microbeads
- Crystalline effect for an incomparable appearance

** compared to 16 mm opal cellular PC*

Smoke control & Roof access | Winch - Thermal improvement base

BLUEBAC THERM WINCH + ACCESS

Infill

16 mm cellular PC

16 mm cellular polycarbonate
Available in opal (standard), clear, Calor Control

20 mm cellular PC

20 mm cellular polycarbonate
Available in Opal, clear, Calor Control

32 mm cellular PC

32 mm cellular polycarbonate
Available in opal, clear, opaque, Calor Control

CUPOLA

Double wall, opal or clear in solid polycarbonate
or polymethyl methacrylate

INSULATED ALUMINIUM COVER

Standard

Accessories and Options

BARS

15x15 mm opening frame in 1200-joule steel

GRILLE

Round opening in 1200-joule steel

LADDER SUSPENSION BAR

Galvanised steel tube that may be used to support any type of ladder for access to the roof

Ladder available
in our Control binder

POSITION SWITCH

Shows the standby or safety position of an NSHEV. Factory mounted

THERMAL FUSE

Automatically opens the vent if the temperature near the roof rises.
Possible with 140°C

PAINT & GEL COAT

The gel coat on the base and the paint for the grille or bars are available in standard RAL shades

RAL 9010 RAL 9005

Air flow finishing

WITHOUT SPOILERS (STANDARD VERSION)

SPOILERS (MAX. VERSION)

Galvanised steel elements that improve air flow performance

© July 2022/Bluetek reserves the right to change the composition and conditions of use of its materials without notice, based on advancing knowledge and techniques. Text, photographs and illustrations not contractually binding.

Smoke control & Ventilation

Electric - Standard base

NEW DIMENSIONS
AVAILABLE 24V OR 48V

BLUEBAC ELEC

OVERHEAD LIGHTING
SMOKE CONTROL
VENTILATION

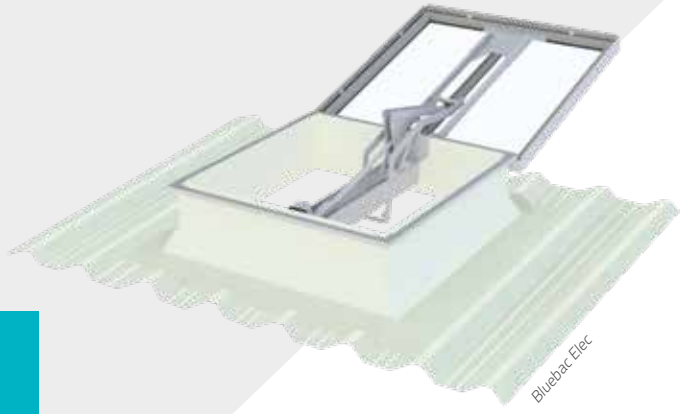

BLUETEK

→ Device pre-mounted in the factory, ready for the electrical cable

Check the availability of profiles in our guide

ELECTRIC CONTROL

Hyperion 24V

Coffret 48V

Standards and requirements

EN 1873
EN 12101-2

Low temperature T (-15°)

Cycles Re 1000 (fire) Re 10,000 (partial ventilation)

Snow load SL250/SL550

Operation Type B Opening + Closing

Static wind resistance WL 1500 Pa

Temperature elevation B 300

Characteristics

- 10 mm opal cellular PC infill
- Thermal electrical release, calibrated to 100°C
- Fibreglass reinforced polyester base, outer walls coated with gel coat.

Smoke control & Ventilation | Electric - Standard base

BLUEBAC ELEC

Technical characteristics

Dimensions			Performances			Characteristics							
						24 V				48 V			
Commercial dimensions (roof opening) W/L in cm	**Light dimensions** (high opening) W x L in cm	**Part numbers***	**Av** (GA) in m²	**Aa** (useful area) in m²		**PCA 10, 16, CAIS** [1]		**DD** [1]		**PCA 10, 16, CAIS** [1]		**DD** [1]	
				Std	Max	**SL250** [2] **I (A)**	**SL550** [2] **I (A)**	**SL250** [2] **I (A)**	**SL550** [2] **I (A)**	**SL250** [2] **I (A)**	**SL550** [2] **I (A)**	**SL250** [2] **I (A)**	**SL550** [2] **I (A)**
110/110	100 x 100	B1S	**1,21**	**0,75**	**0,90**	4,5		4,5		2,5		2,5	
120/120	100 x 100	B2S	**1,44**	**0,88**	**0,94**	4,5		4,5		2,5		2,5	
130/130	120 x 120	B1S	**1,69**	**1,03**	**1,27**	4,5		4,5		2,5		2,5	
140/140	120 x 120	B2A	**1,96**	**0,98**	**1,20**	4,5		4,5		2,5		2,5	
140/140	130 x 130	B1S	**1,96**	**1,20**	**1,47**	4,5		4,5		2,5		2,5	
150/150	130 x 130	B2S	**2,25**	**1,35**	**1,51**	4,5		4,5		2,5		2,5	
150/150	140 x 140	B1S	**2,25**	**1,37**	**1,69**	4,5		4,5		2,5		2,5	
100/200	100 x 200	DR	**2,00**	**1,00**	**1,26**	4,5		—		2,5		—	
110/150	100 x 140	B1S	**1,65**	**1,01**	**1,24**	4,5		—		2,5		—	
110/160	100 x 150	B1S	**1,76**	**1,07**	**1,32**	4,5		—		2,5		—	
110/210	100 x 200	B1S	**2,31**	**1,39**	**1,73**	4,5		—		2,5		—	
120/150	100 x 130	B2S	**1,80**	**1,08**	**1,19**	4,5		—		2,5		—	
120/220	100 x 200	B2S	**2,64**	**1,53**	**1,77**	4,5		—		2,5		—	
120/240	110 x 230	B1S	**2,88**	**1,73**	**2,16**	4,5		—		2,5		—	
130/160	120 x 150	B1S	**2,08**	**1,27**	**1,56**	4,5		—		2,5		—	
130/180	120 x 170	B1S	**2,34**	**1,43**	**1,76**	4,5		—		2,5		—	
150/180	130 x 160	B2S	**2,70**	**1,62**	**1,81**	4,5		—		2,5		—	

** DR: straight upstand - B1: tapered upstand, 5 cm on each side (commercial dimensions = light dimensions +10 cm) - B2: tapered upstand, 10 cm on each side (commercial dimensions = light dimensions +20 cm)*
[1] CAIS: Standard insulated aluminium cover/DD: Double dome cupola
[2] SL 250: 0-400 m altitude/SL 550: 400-800 m altitude
— not available

Smoke control & Ventilation | Electric - Standard base

BLUEBAC ELEC

Technical sections

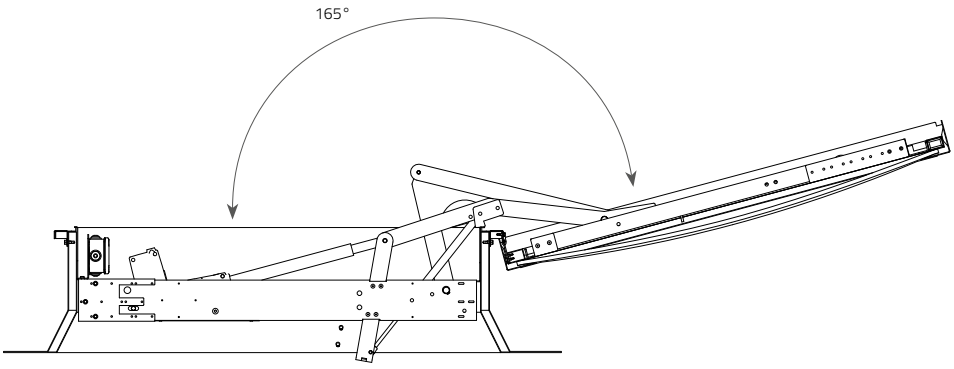

Bluebac elec B1

Smoke control & Ventilation | Electric - Standard base

BLUEBAC ELEC

Infill

10 mm cellular PC

10 mm cellular polycarbonate
Available in opal (standard), clear, opaque, Calor Control

16 mm cellular PC

16 mm cellular polycarbonate
Available in opal, clear, opaque, Calor Control

CUPOLA

Double wall, opal or clear in solid polycarbonate or polymethyl methacrylate

INSULATED ALUMINIUM COVER

Standard

Accessories and Options

BARS

Fixed 15x15 mm, 1200-joule steel

GRILLE

Round fixed in 1200-joule steel

POSITION SWITCH

Shows the standby or safety position of an NSHEV. Factory mounted

ELECTRIC RELEASE

Automatically opens the vent if the temperature near the roof rises
Available in 140 °C

VENTILATION

Partial or total, with the smoke control actuator

PAINT & GEL COAT

The gel coat on the base and the paint for the grille or bars are available in standard RAL shades

RAL 9010 RAL 9005

Air flow finishing

WITHOUT SPOILERS (STANDARD VERSION)

SPOILERS (MAX. VERSION)

Galvanised steel elements that improve air flow performance

© July 2022/Bluetek reserves the right to change the composition and conditions of use of its materials without notice, based on advancing knowledge and techniques. Text, photographs and illustrations not contractually binding.

Smoke control

Pneumatic - Standard base

BLUEBAC PNEU

OVERHEAD LIGHTING

SMOKE CONTROL

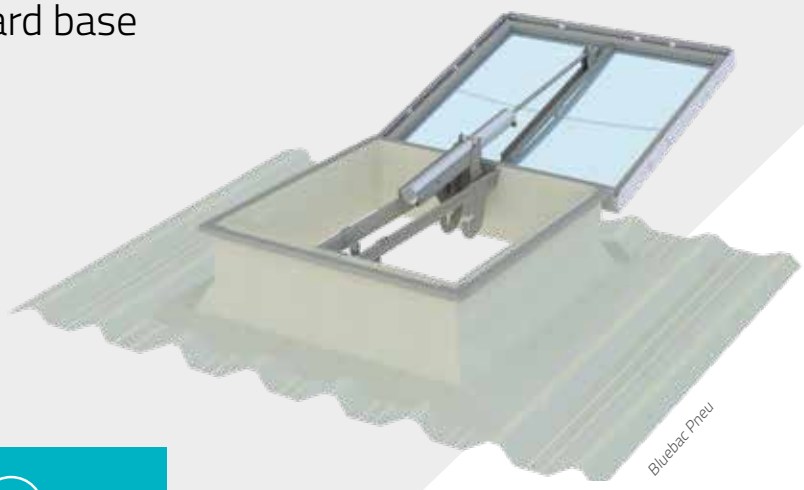

Bluebac Pneu

BLUETEK

→ Device pre-mounted in the factory, ready for the copper tube

Check the availability of profiles in our guide

CONTROL

pneumatic, CLIP type

Standards and requirements

EN 1873
EN 12101-2

Low temperature
T (-15°)

Cycles
Re 300 (fire)
Re 1000 (fire depending on infill and dim.)
Re 10,000 (partial or total ventilation depending on infill and dim)

Snow load
SL250/SL500

Operation
Type B
Opening + Closing

Static wind resistance
WL 1500 or
WL 3000 (≤ 2.53 m²)

Temperature elevation
B 300

Characteristics

- 10 mm opal cellular PC infill
- Thermal release mechanism calibrated to 93°C
- Fibreglass reinforced polyester base, outer walls coated with gel coat.

Smoke control | Pneumatic - Standard base

BLUEBAC PNEU

Technical characteristics

Dimensions			Performances			Characteristics							
Commercial dimensions (roof opening) W/L in cm	**Light dimensions** (high opening) W x L in cm	**Part numbers***	**Av** (GA) in m²	**Aa** (useful area) in m²		**Operating pressure** (bar)				**Total volume of actuators in litres** (L)			
						Cellular PC 10, 16		**CAIS, DD** [1]		**Cellular PC 10, 16**		**CAIS, DD** [1]	
				Std	Max	**SL250** [2]	**SL500** [2]	**SL250** [2]	**SL500** [2]	**SL250** [2]	**SL500** [2]	**SL250** [2]	**SL500** [2]
80/80	80 x 80	DRS	**0,64**	**0,35**	**0,39**	15	20	15	25	0,73	0,73	0,73	0,73
110/110	100 x 100	B1S	**1,21**	**0,75**	**0,90**	15	25	20	15	0,83	0,83	0,83	1,63
120/120	100 x 100	B2S	**1,44**	**0,88**	**0,94**	15	25	20	15	0,83	0,83	0,83	1,63
130/130	120 x 120	B1S	**1,69**	**1,03**	**1,27**	25	20	15	25	0,83	1,63	1,63	1,63
140/140	130 x 130	B1	**1,96**	**1,20**	**1,47**	25	20	15	25	0,83	1,63	1,63	1,63
150/150	130 x 130	B2S	**2,25**	**1,35**	**1,51**	15	25	20	25	1,63	1,63	1,63	2,10
150/150	140 x 140	B1S	**2,25**	**1,37**	**1,69**	15	25	15	25	2,32	2,32	2,32	2,32
180/180	160 x 160	B2S	**3,24**	**1,88**	**2,27**	20	25	20	—	2,32	2,93	2,32	—
100/200	100x200	DRS	**2,00**	**1,00**	**1,26**	25	25	20	25	0,83	1,63	1,63	1,63
110/150	100 x 140	B1S	**1,65**	**1,01**	**1,24**	20	20	25	20	0,83	1,63	0,83	1,63
110/160	100 x 150	B1S	**1,76**	**1,07**	**1,32**	20	20	25	20	0,83	1,63	0,83	1,63
110/210	100 x 200	B1S	**2,31**	**1,39**	**1,73**	25	25	20	25	0,83	1,63	1,63	1,63
110/230	100 x 220	B1S	**2,53**	**1,52**	**1,90**	15	25	20	25	1,63	1,63	1,63	2,10
110/250	90 x 230	B2S	**2,75**	**1,54**	**1,87**	20	25	20	25	1,43	1,83	1,43	1,83
120/220	100 x 200	B2S	**2,64**	**1,53**	**1,77**	25	25	20	25	0,83	1,63	1,63	1,63
120/240	100 x 220	B2S	**2,88**	**1,61**	**1,96**	15	25	20	25	1,63	1,63	1,63	2,10
120/240	110 x 230	B1S	**2,88**	**1,73**	**2,16**	20	25	25	25	1,63	2,10	1,63	2,10
130/160	120 x 150	B1S	**2,08**	**1,27**	**1,56**	15	25	20	25	1,63	1,63	1,63	2,10
130/180	120 x 170	B1S	**2,34**	**1,43**	**1,76**	20	25	20	25	1,63	2,10	1,63	2,10
150/180	130 x 160	B2S	**2,70**	**1,62**	**1,73**	20	25	20	25	2,32	2,93	1,63	2,10
150/180	150 x 180	DRS	**2,70**	**1,40**	**1,81**	20	25	20	—	1,63	2,10	2,32	—

** DR: straight upstand - B1: tapered upstand, 5 cm on each side (commercial dimensions = light dimensions +10 cm) - B2: tapered upstand, 10 cm on each side (commercial dimensions = light dimensions +20 cm)*
[1] CAIS: Standard insulated aluminium cover/DD: Double dome cupola
[2] SL 250: 0-400 m altitude/SL 500: 400-800 m altitude
— not available

Smoke control | Pneumatic - Standard base

BLUEBAC PNEU

Technical sections

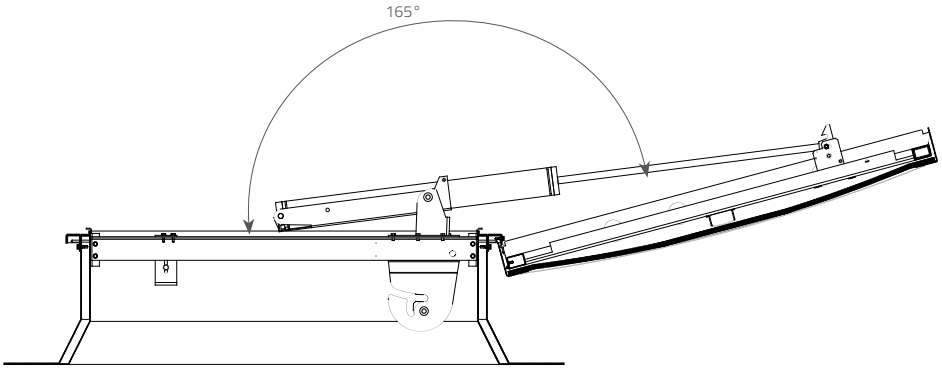

Bluebac Pneu B1

Smoke control | Pneumatic - Standard base

BLUEBAC PNEU

Infill

10 mm cellular PC

10 mm cellular polycarbonate
Available in opal (standard), clear, opaque, Calor Control

16 mm cellular PC

16 mm cellular polycarbonate
Available in opal, clear, opaque, Calor Control

CUPOLA

Double wall, opal or clear in solid polycarbonate or polymethyl methacrylate

INSULATED ALUMINIUM COVER

Standard

Accessories and Options

BARS

Fixed 15x15 mm, 1200-joule steel

GRILLE

Round fixed in 1200-joule steel

POSITION SWITCH

Shows the standby or safety position of an NSHEV.
Factory mounted

THERMAL RELEASE MECHANISM

Automatically opens the vent if the temperature near the roof rises
Available in 140°C and 180°C.

VENTILATION

Pneumatic: full opening with the smoke control actuator (ventilation 6 bar) (depending on dimensions and infill)

Electric: 230 V electric actuator for partial opening, 300 mm or 500 mm (to be fitted on the site)

PAINT & GEL COAT

The gel coat on the base and the paint for the grille or bars are available in standard RAL shades

RAL 9010 RAL 9005

Air flow finishing

WITHOUT SPOILERS (STANDARD VERSION)

SPOILERS (MAX. VERSION)

Galvanised steel elements that improve air flow performance

© July 2022/Bluetek reserves the right to change the composition and conditions of use of its materials without notice, based on advancing knowledge and techniques. Text, photographs and illustrations not contractually binding.

Smoke control

Winch - Standard base

BLUEBAC WINCH

OVERHEAD LIGHTING

SMOKE CONTROL

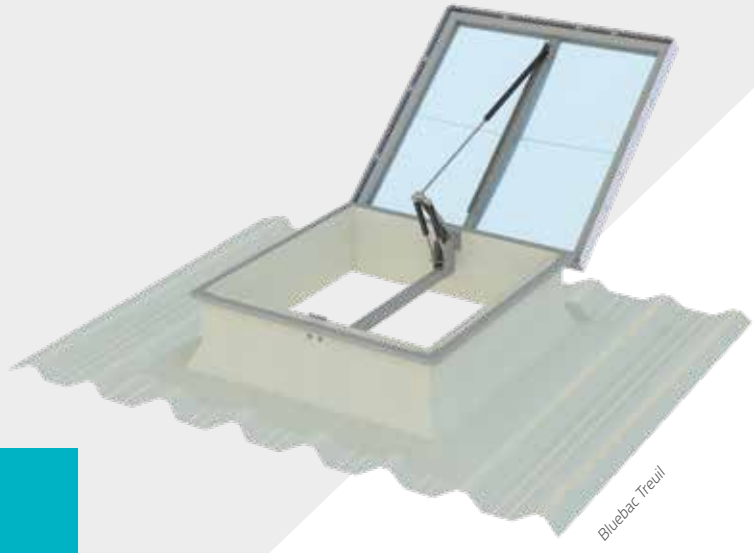

Bluebac Treuil

Check the availability of profiles in our guide

BLUETEK

- Ideal for staircases
- Device pre-mounted in the factory, ready for the winch cable

CONTROL

mechanical, WINCH SI type

Standards and requirements

EN 1873
EN 12101-2

Low temperature
T (0 °)

Cycles
Re 300 (fire)
Re 10,000 (ventilation)

Snow load
SL250/SL500

Operation
Type B
Opening + Closing

Static wind resistance
WL 1500
WL 3000 (≤ 2 m²)

Temperature elevation
B 300

Characteristics

- 10 mm opal cellular PC infill
- Fibreglass reinforced polyester base, outer walls coated with gel coat
- Thermal fuse calibrated to 100°C

Smoke control | Winch - Standard base

BLUEBAC WINCH

Technical characteristics

Dimensions			Performances			Characteristics					
						Snow load					
						Cellular PC 10, 16		CAIS [1]		DD [1]	
Commercial dimensions (roof opening) W/L in cm	**Light dimensions** (high opening) W x L in cm	**Part numbers***	**Av** (GA) in m²	**Aa** (useful area) in m² Std	Max	SL250 [2]	SL500 [2]	SL250 [2]	SL500 [2]	SL250 [2]	SL500 [2]
110/110	100 x 100	B1S	**1,21**	**0,61**	**0,90**	•	•	•	•	•	•
120/120	100 x 100	B2S	**1,44**	**0,72**	**0,95**	•	•	•	•	•	•
130/130	120 x 120	B1S	**1,69**	**0,85**	**1,27**	•	—	•	—	•	—
140/140	130 x 130	B1	**1,96**	**0,98**	**1,23**	•	—	•	—	•	—
140/140	140 x 140	DRS	**1,96**	**0,98**	**1,23**	•	—	—	—	—	—
150/150	130 x 130	B2S	**2,25**	**1,13**	**1,55**	•	—	•	—	—	—
150/150	140 x 140	B1S	**2,25**	**1,13**	**1,69**	•	—	—	—	—	—
100/200	100 x 200	DRS	**2,00**	**0,76**	**1,26**	•	—	—	—	—	—
110/150	100 x 140	B1S	**1,65**	**0,83**	**1,24**	•	—	•	—	—	—
110/160	100 x 150	B1S	**1,76**	**0,88**	**1,32**	•	—	•	—	—	—
110/210	100 x 200	B1S	**2,31**	**1,16**	**1,73**	•	—	—	—	—	—
120/150	100 x 130	B2S	**1,80**	**0,90**	**1,19**	•	—	•	—	—	—
120/220	100 x 200	B2S	**2,64**	**1,32**	**1,74**	•	—	—	—	—	—
130/160	120 x 150	B1S	**2,08**	**1,04**	**1,56**	•	—	•	—	—	—
130/180	120 x 170	B1S	**2,34**	**0,96**	**1,76**	•	—	•	—	—	—
150/180	130 x 160	B2S	**2,70**	**1,35**	**1,84**	•	—	—	—	—	—

** DR: straight upstand - B1: tapered upstand, 5 cm on each side (commercial dimensions = light dimensions +10 cm) - B2: tapered upstand, 10 cm on each side (commercial dimensions = light dimensions +20 cm)*
[1] CAIS: Standard insulated aluminium cover/DD: Double dome cupola
[2] SL 250: 0-400 m altitude/SL 500: 400-800 m altitude
● *available,* — *not available*

Smoke control | Winch - Standard base

BLUEBAC WINCH

Technical sections

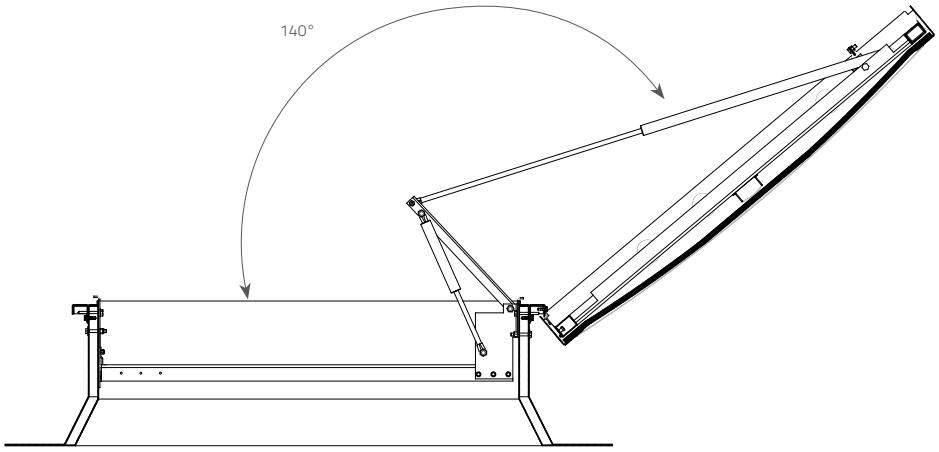

Bluebac Winch B1

Smoke control | Winch - Standard base

BLUEBAC WINCH

Infill

10 mm cellular PC

10 mm cellular polycarbonate
Available in opal (standard), clear, opaque, Calor Control

16 mm cellular PC

16 mm cellular polycarbonate
Available in opal, clear, opaque, Calor Control

CUPOLA

Double wall, opal or clear in solid polycarbonate or polymethyl methacrylate

INSULATED ALUMINIUM COVER

Standard

Accessories and Options

BARS

Fixed 15x15 mm, 1200-joule steel

GRILLE

Round fixed in 1200-joule steel

POSITION SWITCH

Shows the standby or safety position of an NSHEV. Factory mounted

THERMAL FUSE

Automatically opens the vent if the temperature near the roof rises.
Possible with 140°C

VENTILATION

Partial 300 mm

PAINT & GEL COAT

The gel coat on the base and the paint for the grille or bars are available in standard RAL shades

RAL 9010 RAL 9005

Air flow finishing

WITHOUT SPOILERS (STANDARD VERSION)

SPOILERS (MAX. VERSION)

Galvanised steel elements that improve air flow performance

© July 2022/Bluetek reserves the right to change the composition and conditions of use of its materials without notice, based on advancing knowledge and techniques. Text, photographs and illustrations not contractually binding.

Smoke control, Roof access & Ventilation

Electric - Standard base

BLUEBAC ELEC + ACCESS

OVERHEAD LIGHTING | SMOKE CONTROL | ROOF ACCESS | VENTILATION

BLUETEK

- Easy roof access with remote roof access mechanism
- Device pre-mounted in the factory, ready for the electrical cable

Check the availability of profiles in our guide

CONTROL

electric, HYPERION type

Standards and requirements

EN 1873
EN 12101-2

Low temperature
T (0 °)

Cycles
Re 1000 (fire)
Re 10,000 (partial ventilation)

Snow load
SL250/SL500

Operation
Type B
Opening + Closing

Static wind resistance
WL 1500

Temperature
elevation
B 300

Characteristics

- 10 mm opal cellular PC infill
- Thermal electrical release, calibrated to 100 °C
- Fibreglass reinforced polyester base, outer walls coated with gel coat.

Smoke control, Roof access & Ventilation | Electric - Standard base

BLUEBAC ELEC + ACCESS

Technical characteristics

Dimensions			Performance		Characteristics				
Commercial dimensions (roof opening) W/L in cm	**Light dimensions** (high opening) W x L in cm	**Part numbers***	**Av** (GA) in m²	**Aa** (useful area) in m² Std	**Voltage U (V)**	**Cellular PC 10, 16**		**CAIS** [1]	
						SL 250 [2] **I (A)**	**SL 500** [2] **I (A)**	**SL 250** [2] **I (A)**	**SL 500** [2] **I (A)**
110/110	100 x 100	B1S	**1.21**	**0.25**	24	2.5	4	4	4
120/120	100 x 100	B2S	**1.44**	**0.30**	24	2.5	4	4	4

** DRS: straight upstand - B1S: tapered upstand, 5 cm on each side (commercial dimensions = light dimensions +10 cm) - B2S: tapered upstand, 10 cm on each side (commercial dimensions = light dimensions +20 cm)*

[1] CAIS: Standard insulated aluminium cover

[2] SL 250: 0-400 m altitude

— not available

Smoke control, Roof access & Ventilation | Electric - Standard base

BLUEBAC ELEC + ACCESS

Technical sections

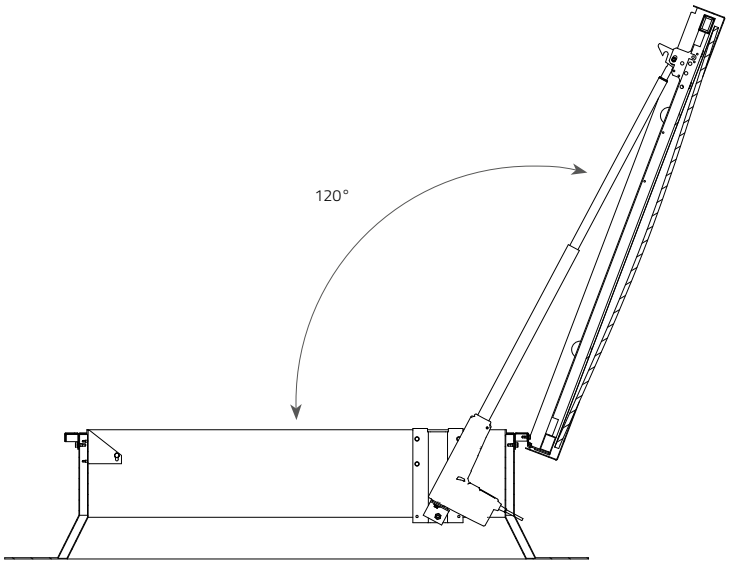

Bluebac elec + access B1

Smoke control, Roof access & Ventilation | Electric - Standard base

BLUEBAC ELEC + ACCESS

Infill

10 mm cellular PC

10 mm cellular polycarbonate
Available in opal (standard), clear, opaque, Calor Control

16 mm cellular PC

16 mm cellular polycarbonate
Available in opal, clear, opaque, Calor Control

INSULATED ALUMINIUM COVER

Standard

Accessories and Options

BARS

15x15 mm opening frame in 1200-joule steel

GRILLE

Round opening in 1200-joule steel

ROOF ACCESS BAR

Galvanised steel bar that makes access to the roof easier and safer

LADDER SUSPENSION BAR

Galvanised steel tube that may be used to support any type of ladder for access to the roof

Ladder available in our Control binder

VENTILATION

Partial or total, with the smoke control actuator

POSITION SWITCH

Shows the standby or safety position of an NSHEV. Factory mounted

ELECTRIC RELEASE

Automatically opens the vent if the temperature near the roof rises
Available in 140°C.

PAINT & GEL COAT

The gel coat on the base and the paint for the grille or bars are available in standard RAL shades

RAL 9010 RAL 9005

© July 2022/Bluetek reserves the right to change the composition and conditions of use of its materials without notice, based on advancing knowledge and techniques. Text, photographs and illustrations not contractually binding.

Smoke control & Roof access

Pneumatic - Standard base

BLUEBAC PNEU + ACCESS

OVERHEAD LIGHTING | SMOKE CONTROL | ROOF ACCESS

BLUETEK

→ Device pre-mounted in the factory, ready for the copper tube

Check the availability of profiles in our guide

CONTROL

pneumatic, CLIP type

Standards and requirements

EN 1873
EN 12101-2

Low temperature
T (-15°)

Cycles
Re 300 (fire)
Re 1000 (partial ventilation)
Re 10,000 (full ventilation)
(≤ 2 m² and depending on infill)

Snow load
SL250/SL500

Operation
Type B
Opening + Closing

Static wind resistance
WL 1500 or
WL 3000 (≤ 2.53 m²)

Temperature elevation
B 300

Characteristics

- 10 mm opal cellular PC infill
- Thermal release mechanism calibrated to 93°C
- Fibreglass reinforced polyester base, outer walls coated with gel coat.

Smoke control & Roof access | Pneumatic - Standard base

BLUEBAC PNEU + ACCESS

Technical characteristics

Dimensions			Performance		Characteristics							
Commercial dimensions (roof opening) W/L in cm	**Light dimensions** (high opening) W x L in cm	**Part numbers***	**Av** (GA) in m²	**Aa** (useful area) in m²	**Operating pressure** (bar)				**Total volume of actuators in litres** (L)			
					Cellular PC 10, 16		**CAIS** [1]		**Cellular PC 10, 16**		**CAIS** [1]	
				Std	**SL250** [2]	**SL550** [2]	**SL250** [2]	**SL550** [2]	**SL250** [2]	**SL550** [2]	**SL250** [2]	**SL550** [2]
110/110	100 x 100	B1S	**1,21**	**0,61**	12	22	13	23	1,67	1,67	1,67	1,67
120/120	100 x 100	B2S	**1,44**	**0,72**	12	22	13	23	1,67	1,67	1,67	1,67
130/130	120 x 120	B1S	**1,69**	**0,85**	11	19	12	—	2,07	2,07	2,07	—

** DR: straight upstand - B1: tapered upstand, 5 cm on each side (commercial dimensions = light dimensions +10 cm) - B2: tapered upstand, 10 cm on each side (commercial dimensions = light dimensions +20 cm)*

[1] CAIS: Standard insulated aluminium cover

[2] SL 250: 0-400 m altitude/SL 550: 400-800 m altitude

— not available

Smoke control & Roof access | Pneumatic - Standard base

BLUEBAC PNEU + ACCESS

Technical sections

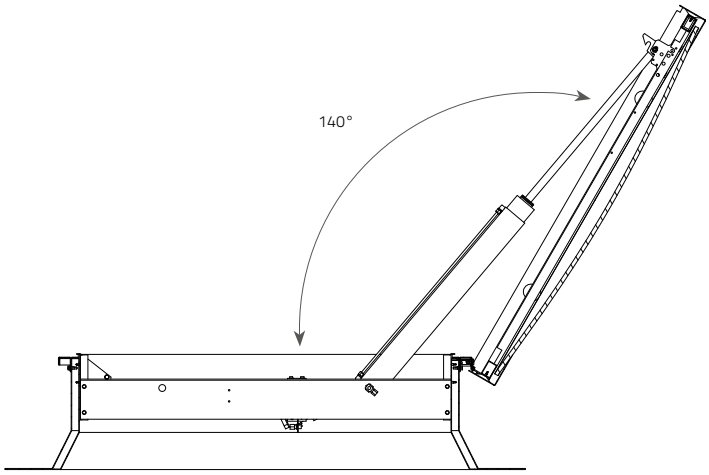

Bluebac pneu + access B1

Smoke control & Roof access | Pneumatic - Standard base

BLUEBAC PNEU + ACCESS

Infill

10 mm cellular PC

10 mm cellular polycarbonate
Available in opal (standard), clear, opaque, Calor Control

16 mm cellular PC

16 mm cellular polycarbonate
Available in opal, clear, opaque, Calor Control

INSULATED ALUMINIUM COVER

Standard

Accessories and Options

BARS

15x15 mm opening frame in 1200-joule steel

GRILLE

Round opening in 1200-joule steel

ROOF ACCESS BAR

Galvanised steel bar that makes access to the roof easier and safer

LADDER SUSPENSION BAR

Galvanised steel tube that may be used to support any type of ladder for access to the roof

Ladder available in our Control binder

POSITION SWITCH

Shows the standby or safety position of an NSHEV. Factory mounted

THERMAL RELEASE MECHANISM

Automatically opens the vent if the temperature near the roof rises
Available in 140°C and 180°C.

PAINT & GEL COAT

The gel coat on the base and the paint for the grille or bars are available in standard RAL shades

RAL 9010 RAL 9005

© July 2022/Bluetek reserves the right to change the composition and conditions of use of its materials without notice, based on advancing knowledge and techniques. Text, photographs and illustrations not contractually binding.

Smoke control, Roof access

Winch - Standard base

BLUEBAC WINCH + ACCESS

OVERHEAD LIGHTING | SMOKE CONTROL | ROOF ACCESS

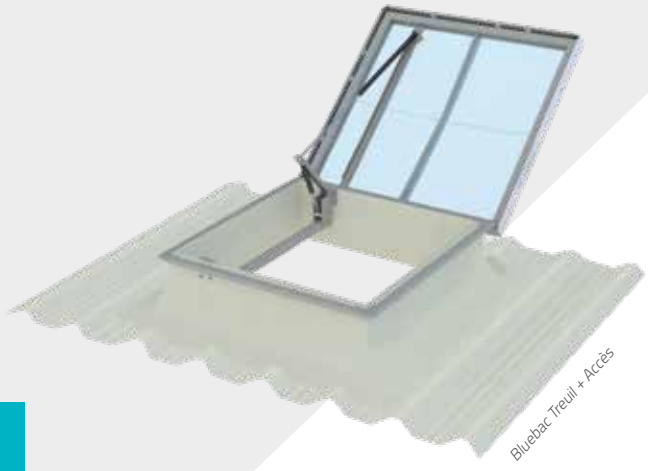

Bluebac Treuil + Accès

BLUETEK

- Ideal for staircases
- Easy roof access with remote roof access mechanism
- Device pre-mounted in the factory, ready for the winch cable

Check the availability of profiles in our guide

CONTROL

mechanical, WINCH SI type

Standards and requirements

EN 1873
EN 12101-2

Low temperature T (-15°)

Cycles
Re 1000 (fire)
Re 10,000 (partial ventilation)
Re 10,000 (full ventilation)
(≤ 2 m² and depending on infill)

Snow load SL250/SL500

Operation Type B Opening + Closing

Static wind resistance WL 1500 or WL 3000 (≤ 1 m²)

Temperature elevation B 300

Characteristics

- 10 mm opal cellular PC infill
- Thermal fuse, calibrated to 100 °C
- Fibreglass reinforced polyester base, outer walls coated with gel coat.

Smoke control & Roof access | Winch - Standard base

BLUEBAC WINCH + ACCESS

Technical characteristics

Dimensions			Performances		Caractéristiques		
Commercial dimensions (roof opening) W/L in cm	**Light dimensions** (high opening) W x L in cm	**Part numbers ***	**Av** (GA) in m²	**Aa** (useful area) in m²	**Snow load**		
					Cellular PC 10, 16		**CAIS-DD** [1]
				Std	**SL250** [2]	**SL500** [2]	**SL250** [2]
110/110	100 x 100	B1S	**1,21**	**0,61**	•	•	•
120/120	100 x 100	B2S	**1,44**	**0,72**	•	•	•
130/130	120 x 120	B1S	**1,69**	**0,85**	•	—	—

** DRS: straight upstand - B1S: tapered upstand, 5 cm on each side (commercial dimensions = light dimensions +10 cm) - B2S: tapered upstand, 10 cm on each side (commercial dimensions = light dimensions +20 cm)*

[1] CAIS: Standard insulated aluminium cover

[2] SL 250: 0-400 m altitude

● *available,* — *not available*

Smoke control & Roof access | Winch - Standard base

BLUEBAC WINCH + ACCESS

Technical sections

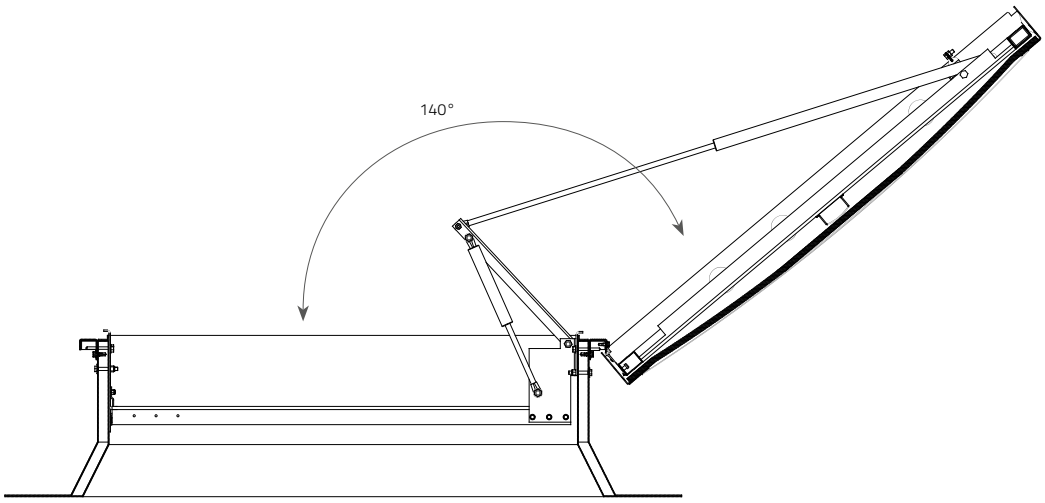

Bluebac Treuil + Accès B1

Smoke control & Roof access | Electric - Standard base

BLUEBAC WINCH + ACCESS

Infill

10 mm cellular PC

10 mm cellular polycarbonate
Available in opal (standard), clear, opaque, Calor Control

16 mm cellular PC

16 mm cellular polycarbonate
Available in opal, clear, opaque, Calor Control

INSULATED ALUMINIUM COVER

Standard

Accessories and Options

BARS

15x15 mm opening frame in 1200-joule steel

GRILLE

Round opening in 1200-joule steel

ROOF ACCESS BAR

Galvanised steel bar that makes access to the roof easier and safer

LADDER SUSPENSION BAR

Galvanised steel tube that may be used to support any type of ladder for access to the roof

Ladder available in our Control binder

VENTILATION

Partial or total, with the smoke control actuator

POSITION SWITCH

Shows the standby or safety position of an NSHEV.
Factory mounted

THERMAL FUSE

Automatically opens the vent if the temperature near the roof rises
Available in 140 °C.

PAINT & GEL COAT

The gel coat on the base and the paint for the grille or bars are available in standard RAL shades

RAL 9010 RAL 9005

© July 2022/Bluetek reserves the right to change the composition and conditions of use of its materials without notice, based on advancing knowledge and techniques. Text, photographs and illustrations not contractually binding.